A Small Scale Wave Energy Converter Development By Experimental Test

Hanbin Gu[1], Xiaoan Zhu[1], Chengcheng Wang[1],Dongxu Wang[1], Gancheng Zhu[1], Ruiyin Song[2], Pengzhi Lin[1,3], Ling Qian[4]

1 Institute of Ocean Engineering/School of Civil & Environmental Engineering and Geography Science, Ningbo University, Ningbo, Zhejiang, China, 315211

2 Ningbo Tech University, Ningbo, Zhejiang, China, 315100

3 Sichuan University, Chengdu, Sichuan, China, 610065

4 Manchester Metropolitan University, Manchester, UK, M156BH

Abstract

Waves contain huge energy, and very little wave energy may meet a small-scale ocean instrument demand. In this paper, an inner pendulum float wave energy converter is developed. The buoy is designed and its energy capture test is conducted in a wide wave flume in Ningbo University. The buoy has an elliptic top section with long axis often along wave direction, the bottom is semicircle in the vertical section along wave direction. The inner pendulum moving in wave direction is installed whose axle driving a three-phase AC motor to generate electricity. The electric circuit is designed to rectify AC to DC and to store DC electricity into a battery. Electric resistances are set as operating load, value of resistances and voltage on a resistance are measured to calculate the power captured by the device. The test is conducted in regular wave, the relationship between power captured and wave condition are analyzed. The system captures more energy at wave period 1.0s. It is predicted that when the system adopted on ocean fishing field, the averaged power is about 279 mW, and the maximum power is about 1306 mW.

Keywords: Wave energy converter, regular wave, experiment, capture width ratio

1 Introduction

At present, lots of ocean wave energy convertor (WEC) devices are developed or having been developed, which can be referenced in literatures such as Ahamed et al 2020, Qiao et al 2020, Babarit 2015. Inner pendulum WEC is an important type of it, in which the pendulum can be moving in vertical plane (Pozzi et al. 2017), or in horizontal plane (https://wello.eu/product/), or in arbitrary plane (Bracco et al. 2016, Sirigu et al. 2016).

The inner pendulum WEC has great advantages with the hull hold every component of the device such as the moving pendulum, the power take-off, the transmission parts, electricity generator and electricity storage etc. Salty ocean water is isolated by hull of the buoy which protects the mechanical and electric members against corrosion. The integration of this kind of device is better than other device with complex structure.

In this study, the inner vertical pendulum is adopted to fish-finding buoy to capture wave energy, this kind of device currently most use sonar energy to supply electricity. While, in the ocean fishing field the device is acted by waves and cannot keep a steady position, it is often lost by using out of electricity, especially it cannot get energy in a night or in a cloudy day. To solve the energy shortage for the fish-finding buoy, wave energy is a better solution, because that in most ocean fishing fields there are much more wave energy, lots of them have wave energy density greater than 10kW/m, even higher to 100~120kW/m.

2 Wave energy converter design

2.1 Hull of the device

The shape of a fish-finding buoy is normally a small body of rotation. Weight of a fish-finding buoy is in the range of 20~30 kg, which is easy to deploy on ocean. In the designed buoy, wave energy would be applied to supply electricity for fish finding and transferring information to its owner. When its inner

pendulum moving in a vertical plane along wave ongoing direction, the motion between the inner pendulum and the hull of the buoy would be enlarged. A special shape of the buoy is designed as Fig.1. The weight of the buoy is in the range as its normal status. Its shape is suitable for wave energy capture. The length of the buoy is close to 0.5m near free surface in still water, and the width of it is 0.3m; its radius at bottom is 0.05m. Five typic cross-sections are shown in the Fig.1, which can control the shape of the buoy.

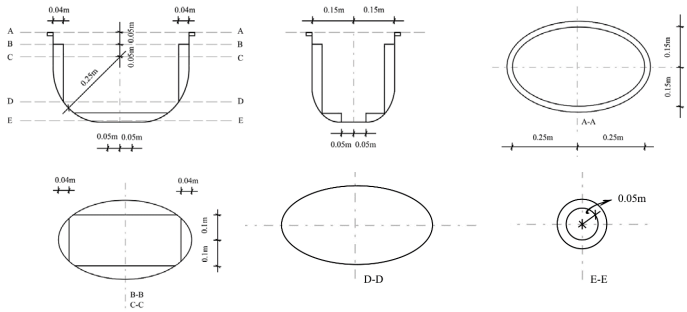

Fig.1 Hull of the buoy

2.2 Wave energy capture and converter

The inner pendulum is installed in the fish-finding buoy as shown in Fig.3. The buoy will be moving under waves, which may induce the inner pendulum rotating with its suspended axis. The arm of the inner pendulum connected with a gearbox that increases rotation speed to an axis connected to a three-phase alternator. The three-phase alternator generates electricity which can be rectified from AC to DC. A transformer is adopted to increase the electricity voltage a bit higher than that of a storage battery demand. Several electricity resistances are used as load instead of real electricity usages. The electric circuit is shown in Fig.2.

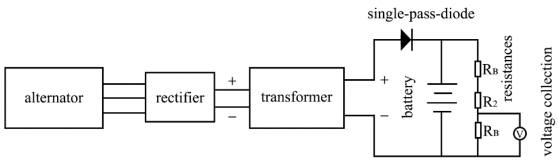

Fig. 2 Electric circuit of the wave energy converter

3 Experimental Tests

3.1 Aim of the test

The aim of the experimental test is to check the mechanism of that if the buoy-inner-pendulum system works under waves as imaged to capture wave energy, how much power the system can capture up and the behavior of the system to capture up wave energy, what kind of optimal need to do to improve its energy capturing capability.

3.2 Experimental setup

The experimental test is conducted in a wave flume at the Institute of Ocean Engineering, Ningbo University, the flume is 10.8m long, 1.45m wide and water depth 0.5m. An actively absorbing wave generator is installed in the wave flume to generate regular wave and irregular wave. The energy device is set in the middle of the flume as shown in Fig.3, the distance from the device to wave maker is 5.0m, and wave absorbing zone is set in the opposite end of the wave maker. At the primary stage of the project, only regular waves are generated in the test with wave period in the range of 0.7~2.4s and wave height in the range of 0.05~0.12m. Three wave gauges are set in the test as shown in Fig.3 to verify the waves in a given wave condition, and to observe the water surface variation around the buoy.

In most cases the energy device is moored in the middle of the flume. Some comparing tests are

conducted for the device without mooring either. It is not only considering wave condition variation but also considering the different electric load, the different weight and arm length of the pendulum, the draft of the buoy etc. in the test. Some photos in the test are shown in Fig.4.

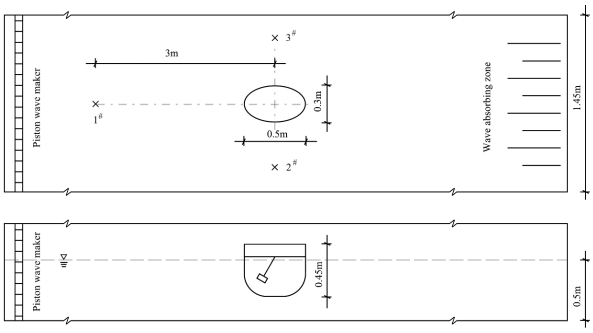

Fig. 3 Setup of the test

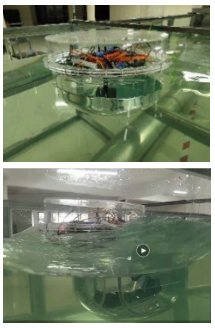

Fig.4 Device in the test

3.3 Measurement

As mentioned above wave gauges are used to verify wave period and wave height. Other important data need to record are the power of the device get from waves and posture of the buoy under waves. The power of the device extracting from waves cannot be directly measured. In the test, several electric resistances are adopted as electric load. The resistance can be directly measured, and the voltage between two ends of the resistance can be measured by the wireless voltage collection node (Fig.5(a)) in the electric circuit (Fig.2). Based on the voltage (Fig.5(b)) and the resistance the power of the device can be calculated as shown in Fig.5(c).

(a)Voltage collection node

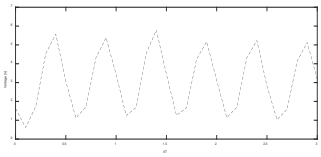

(b) Electric voltage

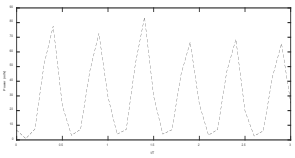

(c) Power capture by the device

Fig. 5 Time histories of acceleration and voltage

3.4 Analyzing method

As above described the measured voltage is on a third of total electric resistance, because of that the measuring range of the voltage collection node less than 5V, then the real voltage captured by the device is 3 times of it. The total power of the device captured is 9 times of that get by the directly measured voltage. The mean voltage captured is 3 times of mean value measured, which is time integrated within ten wave periods and divided by the total time length. The maximum voltage is the maximum value in the above integral interval. The corresponding power can be calculated by P=U*U/R, U is the voltage and R is the electric resistance.

4 Results

4.1 Effect of energy capture by wave period and wave height

Tests are conducted under wave height H=0.08m, 0.1m and 0.12m; and wave period T from 0.70s to 2.5s. In this case, the draft of the buoy is 0.31m with weight of 30.8kg, the arm length of the pendulum is 0.155m with weight 2 kg, and the electric resistance is 960Ω.Electric voltages are measured and analyzed to find the averaged voltage and maximum voltage which are shown in Fig.6. According to the measured voltage, averaged power and maximum power captured by the device are calculated. It is shown that the device can capture up more power at wave period T=1.0s, when wave period is less or more than T=1,0s the power captured is less; in case of higher wave height more power can be captured. The averaged electric voltage is in the range of 3.4~4.3 V at T=1.0s for different wave height, and the

maximum value is in the range of 9.3~13.1V at the same condition. The averaged power captured by the device is in the range of 12.2~19.2 mW, and the maximum power is in the range of 89.5~177.4 mW under wave period T=1.0s; the higher value corresponding to wave height H=0.12m and the lower value corresponding to H=0.08m. The reason of more power capture at T=1.0s is that resonance occurs at this wave period. The natural pitch period of the buoy is about 0.82, the pendulum induced natural period a bit little increase as finding of Pozzi et al 2017.

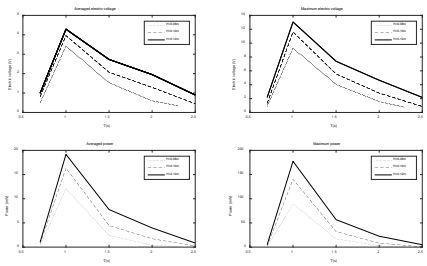

Fig. 6 Voltage and power with wave period

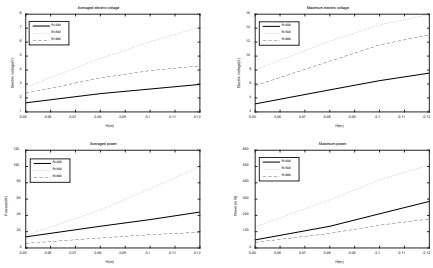

Fig. 7 Voltage and power with wave height

To understand how wave height affects the energy capture up by the device, tests are conducted under wave period T =1.0s, in which much power can be converted from waves. In this case the wave height is in the range of 0.05m~0.12m, the draft of the buoy is 0.31m with weight of it 30.8kg, the arm length of the pendulum is 0.155m with weight 2 kg, and the electric resistance with R = 200 Ω, 500 Ω and 960 Ω. It can be seen from Fig.7 that the measured averaged electric voltage, the maximum voltage, the averaged power calculated and the maximum power captured by the device are increasing with wave height increased. The maximum averaged voltage is 7.1 V, the maximum of the maximum voltage is 16.0 V, the maximum averaged power calculated is 100.3 mW and the maximum of the maximum power calculated is 509.4 mW, which are in case of R = 500 Ω. An interesting phenomena is that the maximum power captured up by the device is in case of R = 500 Ω which is in the middle setting, so this is the optimal electric resistance.

4.2 Load effect on energy capture

As seen in above test, resistances are important parameters to wave energy capture. So, more resistance is set to find optimal value. Fig. 8(a) shows results that resistance affects the energy captured. In this case, the wave height H=0.08m, 0.1m and 0.12m, the wave period T=1.0s and 2.0s, the draft of the buoy is 0.31m with weight of it 30.8kg, the arm length of the pendulum is 0.155m with weight 2 kg, and the electric resistance is in the range of 200 Ω ~ 960 Ω. It is shown that in case of wave period T=1.0s, the maximum averaged voltage and the maximum voltage occurs at R=700 Ω, which in the range of 4.95~8.7 V and 14.1~19.5V with higher value corresponding to higher wave height. While the power calculated is not always higher at R=700 Ω. In case of wave height H=0.10m and H=0.12m, the higher voltage occurs at R=700 Ω which is consistent to power captured; but in case of H=0.08m the maximum power calculated occurs at R=500 Ω even though the maximum voltage at R=700 Ω. The reason is that the power is not directly measured which may has some errors to get the induced variation, further more tests need to design to get more reasonable results.

In case of wave period T=2.0s, wave energy captured up is much less than that T=1.0s. Fig.8(b) shows the result in which the voltage has a similar variation with that in case of T=1.0s, but the power calculated is much different from that T=1.0s. The reason to induced this result is not clear at present. More tests need to be done to check the phenomena.

The maximum averaged power captured is 108.1 mW and the maximum of the maximum power is 544.9 mW with R=700 Ω when wave period T=1.0s. Corresponding to that the maximum averaged

power is 13.1 mW with R=200 Ω and the maximum of the maximum power is 52.5mW with R=700 Ω when wave period T=2.0s.

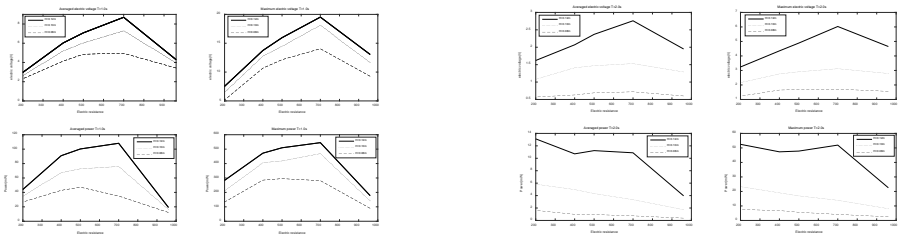

(a) Case of T=1.0s (b) Case of T=2.0s

Fig. 8 Voltage and power variation with resistance

4.3 discussion on utilization of the buoy in fishing field

The buoy with inner pendulum system will be applied to the fishing field, where waves have large wave height and large wave period. It can be noted that with large wave period the system cannot capture more energy. While on the ocean surface, there exists small wave period component, due to the system suitable for wave period around 1.0s, these kind waves cannot develop into higher wave height, the limitation of wave height will be about 0.22m, these waves are often occurring in real sea state. Based on the experimental data, the power related to these waves and the optimal resistance can be utilized, so the energy power can be predicted that the averaged power is 279 mW, the maximum power is 1306mW.

5 Conclusion

The inner pendulum buoy used for fish-finding is designed which captures wave energy as supplement to sonar energy to avoid the buoy missing. Experimental tests are conducted to consider that the wave period and wave height effect on energy capture, the properties of the buoy system such as draft, arm length and weight of the pendulum etc. effect on energy capture, and the electric resistance effect on it.

It is shown that wave period has great influence on energy capture, and much more energy can be obtained at wave period 1.0s. The energy capture will increase with wave height increasing. The electric resistance has influence on energy capture, when resistance is 700 Ω the system can obtain more energy. Other factors to affect energy can be referenced in the detail in section 4. The important result is the buoy system can be predicted that the average power and the maximum power are 279 mW and 1306 mW respectively.

Acknowledgements

The study was supported by Zhejiang Public Welfare Fund with NO. LGJ19E090001; Open Fund of the State Key Laboratory of Hydraulics and Mountain River Development and Protection, Sichuan University, with No. SKHL2108; water science and technology projects from Ningbo Municipal Water Conservancy Bureau.

Reference

Ahamed R, Mckee K, Howard I. Advancements of wave energy converters based on power take off (pto) systems: a review. Ocean Engineering 2020, 204: 107248. https://doi.org/10.1016/j.oceaneng.2020.107248

Babarit A., 2015. A database of capture width ratio of wave energy converters. Renew. Energy 80, 610–628.

Bracco G., Cagninei A., Giorcelli E, Mattiazzo G., Poggi D., Raffero M. 2016. Experimental validation of the ISWEC wave to PTO model. Ocean Engineering 120, 40–51

Pozzi N., Bracco, G., Passione B. Sirigu, S. A., Vissio, G. and Mattiazzo, G. 2017. Wave Tank Testing of a Pendulum Wave Energy Converter 1:12 Scale Model. International Journal of Applied Mechanics Vol. 9, No. 2 1-30

Qiao, D., Haider, R., Yan, J., Ning, D., & Li, B. (2020). Review of wave energy converter and design of mooring system. Sustainability, 12(19), 8251.

Sirigu S.A., Vissio G., Bracco G. Giorcelli E., Passione B., Raffero M., Mattiazzo G. 2016 ISWEC design tool. International Journal of Marine Energy 15, 201-213