Global Journal of Flexible Systems Management (March 2024) 25(1):81–100
https://doi.org/10.1007/s40171-023-00360-1

ORIGINAL RESEARCH

How Flexibility Helps Rapid Production of Electric Vehicles in Azerbaijan

Fakhrul Hasan[1] · Gular Ibrahimova[2] · Mohammad Raijul Islam[3]

Received: 26 April 2023 / Accepted: 8 October 2023 / Published online: 1 December 2023

Abstract *This research paper concentrates on determining whether the perceived usefulness, ease of use, compatibility and complexity are determinants of customers' purchase intentions of hybrid electric vehicles in Azerbaijan. The research's theoretical framework was established via technology acceptance model and innovation diffusion theory. The sample of the study was 121 customers using hybrid electric vehicles in Azerbaijan, whose participation in the questionnaire of study provided the opportunity to assemble primary data. The research findings about the perceived usefulness, ease of use and compatibility of hybrid electric vehicles were statistically significant. This study also identified that perceived complexity in using the hybrid electric vehicles did not have an empirically significant relationship in the purchase intention of hybrid electric vehicles in Azerbaijan, which has a negative impact on the industry.*

Keywords Complexity and compatibility · Flexibility · Hybrid electric vehicles · Perceived usefulness · Perceived ease of use · Purchase intention

✉ Fakhrul Hasan
fakhrul.hasan@northumbria.ac.uk

Gular Ibrahimova
gularibrahimova@gmail.com

Mohammad Raijul Islam
m.islam@mmu.ac.uk

[1] Newcastle Business School, Northumbria University, Newcastle, UK

[2] York Management School, University of York, York, UK

[3] Manchester Metropolitan University Business School, Manchester Metropolitan University, Manchester, UK

Introduction

Over the recent years, electric vehicles have gained popularity among the customers, as the sales rate of cars with electric vehicles has increased significantly (Schlüter & Weyer, 2019). While in 2015, the yearly sales rate of cars with electric vehicles was estimated at about 500 thousand, it increased to over 750 thousand in 2017 (Jin & Slowik, 2019). Besides, the global market for the cars with electric vehicles increased to about 2 million per year in sales by 2018 (Jin & Slowik, 2019). The electric vehicles have been perceived by the customers as a less suitable means for transportation due to their certain limitations (Berjoza & Jurgena, 2017). In particular, the electric vehicles are characterized by their limited driving range, as the typical car equipped with the electric vehicles can move between 200 and 350 km in case of fully charged batteries (Berjoza & Jurgena, 2017). The unavailability of the stations for charging the batteries of electric vehicles, such as plug-in electric vehicles has been another critical factor leading the customers to prefer vehicles equipped with internal combustion engines (Berjoza & Jurgena, 2017). Another factor causing the electric vehicles to be perceived as less suitable means for transportation by the customers is related to the requirements of the full battery charging time. In particular, plug-in electric vehicles require between 30 to 45 min to be fully charged, which is significantly higher time for the customers as compared to conventional vehicles that don't require such a thing (Berjoza & Jurgena, 2017). The last disadvantage of electric vehicles is associated with the cost of battery packs. The price of battery packs of electric vehicles is expensive, which demotivates the customers to make purchase decisions of the respective cars in the global automobile industry (Angeles et al., 2022; Berjoza & Jurgena, 2017; D'Adamo et al., 2023).

According to Albatayneh et al., (2020), the global market for electric vehicles has been growing due to two principal reasons. The first reason is associated with their capability of functioning with either low or zero emissions to the environment (Albatayneh et al., 2020). In particular, the cars occupied with electric vehicles produce considerably lower carbon footprint in comparison with the cars occupied with combustion engines (Albatayneh et al., 2020). Besides, hybrid electric vehicles produce about two times less carbon footprint on average compared with conventional vehicles (Albatayneh et al., 2020). The second reason for the growing market for electric vehicles is associated with the cost efficiency of the vehicles. Electric vehicles are about 70% more efficient than the conventional ones as the former primarily utilizes electricity as a means for power generation in contrast to the latter which depends on gasoline (Albatayneh et al., 2020). Thus, environmentally sound nature and cost efficiency of the electric vehicles are considered as two important competitive advantages of the electric vehicles over the conventional ones.

Despite the disadvantages of electric vehicles (such as limited driving range, long-lasting charging time, and costly battery packs), the electric vehicles experience the proliferation in the current global automobile industry. Moreover, according to Berjoza and Jurgena (2017), electric vehicles for the safe environment and cost efficiency compared to conventional vehicles are also the primary reasons for the increasing popularity of the electric vehicles among the customers (Hasan, 2020). Hence, the present study is concerned about identifying the reasons leading the customers to make purchase decisions for the electric cars despite their disadvantages.

Although electric vehicles have been gaining popularity in the current global automobile industry, the market share of electric vehicles is still small compared to conventional vehicles (Hasan et al., 2022a, 2022b). In 2020, the global market share of electric vehicles was 19.5%, which was 1.2% higher than that of the previous year (Hasan et al., 2021; IEA, 2021). There are certain factors restricting the diffusion of electric vehicles. The first restriction is related to their limited range, as the travel distance with electric vehicles is extremely conditional to the speed, driving style, types of cargo being carried and the road condition (Hidrue et al., 2011). The second limitation is associated with their long charging time required for filling the storage with electricity (Hidrue et al., 2011). The safety concern is the third factor restricting the diffusion of electric vehicles as the fuel-cell electric vehicles are highly flammable in case of potential errors or damages to the electric motors (Hidrue et al., 2011). The fourth restricting factor is the social acceptance of electric vehicles related to the insufficient number of charging stations (Hasan & Islam, 2022; Kang et al., 2014). The final restricting factor is associated with their high maintenance costs compared to conventional vehicles (Kang et al., 2014). In particular, the passenger electric vehicles require higher maintenance costs compared to the conventional counterparts (Kang et al., 2014).

Innovation's relative advantage is defined as the 'competitive advantage of a particular innovation in comparison with conventional products' (Schwarzer, 1999). However, once the hybrid electric vehicles innovations' advantages to their conventional alternatives are communicated to the consumers in a particular community via suitable messages, the consumer willingness to purchase the relevant products would increase relatively despite the limitations. In this regard, hybrid electric vehicles' relative advantages, such as less carbon emissions; noise pollution and overdependence on internal combustion engines, could be the reasons leading the customers to purchase the passenger hybrid electric vehicles, which will be analyzed in the current study (Legris et al., 2003).

In the current study, the research concentrates on identifying the reasons leading the customers to purchase a particular form of electric hybrid vehicle due to their rising popularity, sales rate and market share in the global passenger cars market.

The main goal of the study is to identify the reasons leading to the proliferation of the electric vehicles in Azerbaijan. In particular, the study focuses on determining the reasons leading the customers to purchase the cars equipped with electric vehicles despite their competitive disadvantages once compared with the conventional cars using internal combustion engines. The research has four specific objectives:

This study contributes in several ways to the literature, which are: (1) this is the first paper from best of our knowledge, which one investigates the reasons of the rapid increase of electrical vehicle use in Azerbaijan; (2) the study focuses on determining the reasons leading the customers to purchase hybrid electric vehicles despite their competitive disadvantages compared to conventional vehicles, and (3) the study used larger data set compared to other study in the relevant area.

Rest of the study is divided into four sections. The second section is literature review, where we explain the concept of electric vehicles along with the types of the electric vehicles. Moreover, this section highlights the theoretical framework of the current study via explaining the related theories, such as Technology Acceptance Model and Innovation Diffusion Theory. The third section is research methodology, in which the data gathering process, analysing data along with the population, sample and method of sampling are discussed. Furthermore, the section presents the ethical norms adopted and followed throughout the data collection and analysis process. In the fourth section, we discuss our findings using pie charts and tables along with the findings' analyses in accordance with

the research goals. In the final section, we conclude our research paper.

Literature Review and Hypothesis Development

Concept of Electric Vehicles

Electric vehicles have been developed as an alternative for the conventional drive system in which the internal combustion engine is converting the chemical energies in gasoline or diesel into the mechanical energies for power (Kim & Kum, 2016). In contrast to the conventional drive system, electric vehicles are empowered with batteries functioning as an energy source (Kim & Kum, 2016). There are four types of electric vehicles, such as battery, hybrid, plug-in, and fuel-cell electric vehicles (He et al., 2012).

The first firm of electric vehicles is regarded as battery run electric vehicles, in which batteries serve as an only source of energy (Fig. 1). When the battery electric vehicles are charged fully, they can cover between 100 and 250 km; however, the covering capacity of the respective vehicles is conditional to climate, road condition, and age of battery (He et al., 2012). In this regard, the capacity of batteries determines the capability of the vehicles. Once the battery of electric vehicles is completely depleted, it takes hours for the electric batteries to recharge, which is quite a long period of time as opposed to the time with conventional drive systems for fuel replenishment (He et al., 2012). Battery electric vehicles are characterized as environmentally friendly vehicles as they do not cause noise pollution or greenhouse gas emission (He et al., 2012).

In hybrid electric vehicles, the passenger cars are equipped with two engine systems, such as internal combustion engine system and electric propulsion system. The internal combustion engine is used in the passenger cars when the higher speed and energy is demanded (Yang et al., 2018). In such cases, the hybrid electric vehicles switch to the internal combustion engine. However, in the conditions requiring the lower speeds, the hybrid electric vehicles switch to the electric propulsion engine, such as, in case of traffic in urban areas (Hasan et al., 2022a, 2022b; Yang et al., 2018). The hybrid electric vehicles produce less greenhouse gas and noise pollution compared to the conventional vehicles (Yang et al., 2018). Besides, in the hybrid electric vehicles, the internal combustion engine functions as a charger of the electric batteries. In particular, the electric batteries in hybrid electric vehicles are recharged via a regenerative braking system during using the internal combustion engine (Fig. 2). Hybrid electric passenger vehicles can recharge the battery packs via means of internal combustion engine, which saves the time and cost for the customers compared to the battery electric vehicles. In this system, the internal combustion system is the principal driving force of the hybrid vehicles compared to the battery electric vehicles.

Another form of electric vehicles is regarded as plug-in electric vehicles, in which the internal combustion engine and electric power systems are combined for generating driving force. In this case, plug-in versions of hybrid electric vehicles utilize the internal combustion engine and energy propulsion systems for power-generation. In contrast to the hybrid vehicles, the principal driving force in the plug-in version is the electric motor (Ellingsen et al., 2016). In the plug-in electric vehicles, the electric power is used to start and run the vehicle and once the capacity of electric batteries is low, the system switches to the internal combustion engine for providing the boost and recharging the electric batteries (Fig. 3). However, in hybrid electric vehicles, the power generated from an internal combustion engine via gasoline or diesel is used for starting and running the vehicle, and switching to the electric motors once the condition, battery capacity and willingness of the driver are combined. Another principal difference between the plug-in and hybrid versions of electric vehicles is that 'battery packs in the plug-in electric vehicles can be recharged via means of connecting the battery to the grid' (Ellingsen et al., 2016). Furthermore, the plug-in electric vehicles produce less greenhouse gas and noise pollution compared to the hybrid electric vehicles as the plug-in version primarily uses electricity only.

The last version of electric vehicles is regarded as 'fuel-cell electric vehicles', in which the chemical reactions emerging in the fuel cell are used as a means for producing power for the vehicles (Camacho & Popa, 2016). In particular, the chemical reactions emerge via means of combining the hydrogen and air in the fuel cells, which generates power for electric motors (Fig. 4). The hydrogen in the fuel-cell electric vehicles is stored in a particular high-pressure tank and the oxygen is acquired from the environment air (Fig. 4). The surplus of energy generated in fuel-cell is stored in the battery pack of the passenger cars (Camacho & Popa, 2016). The principal competitive advantage of this vehicle is related to its capability of producing its own electricity via means of chemical reactions (Camacho & Popa, 2016). Accordingly, this vehicle is characterized by its zero-carbon emission in the process of generating power for motor vehicles, which reduces its carbon footprint (Camacho & Popa, 2016). Further competitive advantage of fuel-cell electric vehicles is associated with the time required for refilling the vehicles. In the

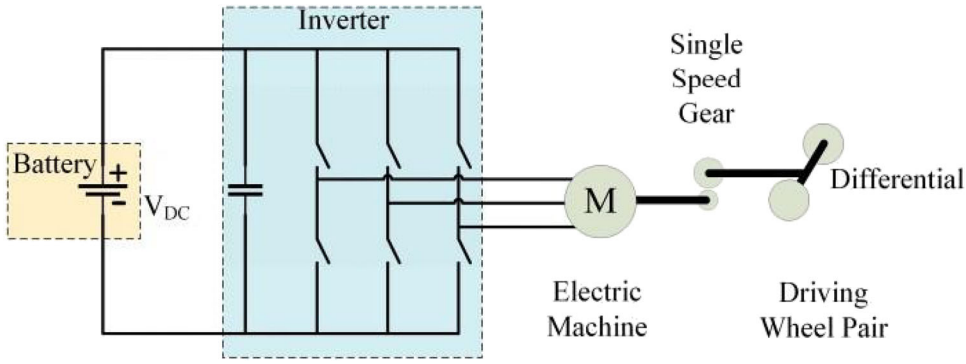

Fig. 1 Configuration of battery electric vehicles (Grunditz & Thiringer, 2016)

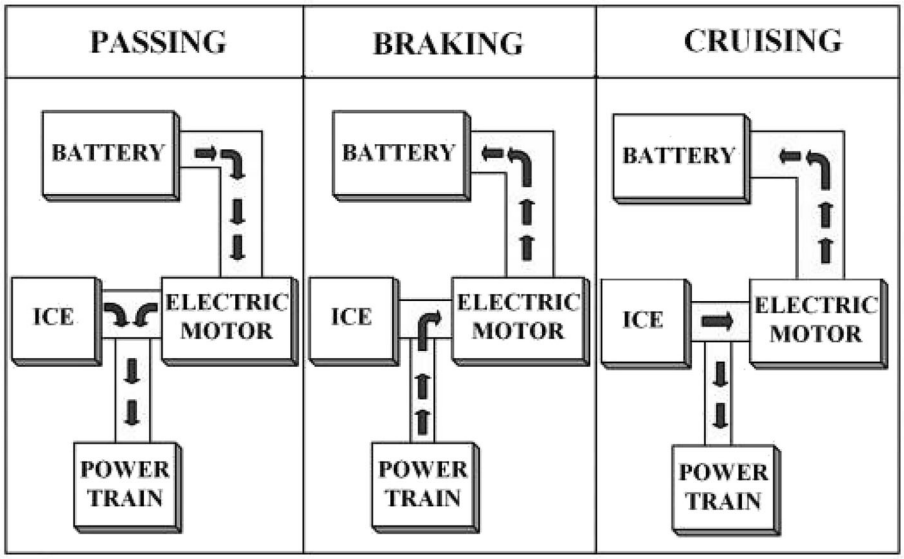

Fig. 2 The flow of power in hybrid electric vehicles (Grunditz & Thiringer, 2016)

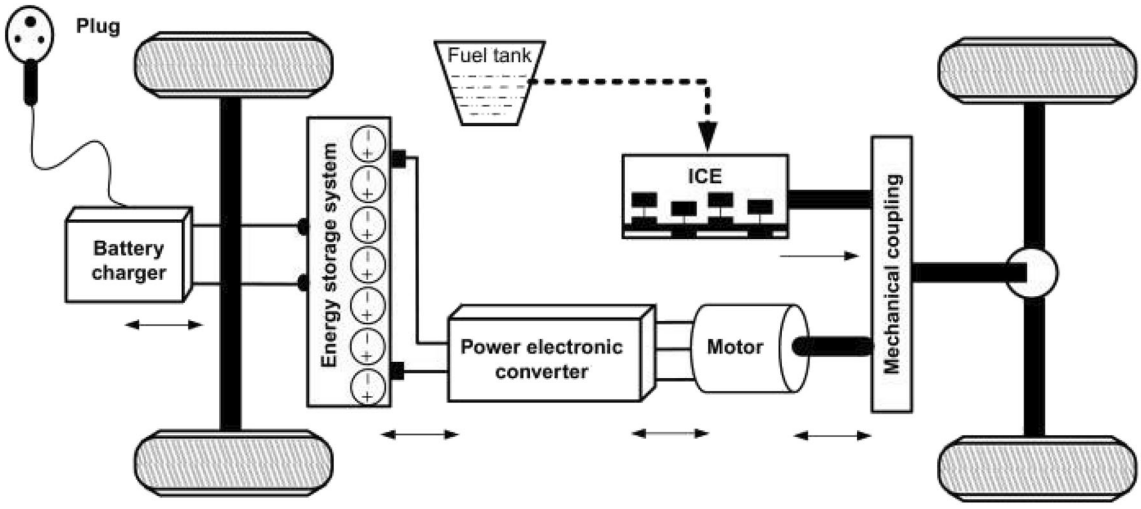

Fig. 3 Configuration of plug-in electric vehicles (Ellingsen et al., 2016)

case of conventional driving system, it takes few minutes to fill the hydrogen tank of the car at gas stations (Camacho & Popa, 2016).

In general, there are various forms of electric vehicles available in the current automobile industry, such as battery, hybrid, plug-in and fuel-cell electric vehicles.

Theoretical Framework

Technology Acceptance Model

One of the principal theories highlighting the usage behavior of consumers is regarded as 'Technology Acceptance Model' developed by Davis, Bagozzi, and Warshaw (1989) for the purpose of explaining the consumer attitudes toward technological innovations. The respective model suggests that there are two factors shaping and determining the usage behavior of consumers, such as "perceived usefulness" of technological innovation and its "perceived ease of use" (Fig. 5). While the perceived usefulness refers to the thoughts and perceptions of the consumers about the benefits, functionality, effects, value and other core characteristics of a particular product, the perceived ease of use refers to the views of consumers about the extent of difficulty of using the relevant product (Legris et al., 2003). These two external factors determine the attitudes of consumers toward using a particular product. Once the consumers demonstrate a positive perception about usefulness and ease of use of a particular product, they produce a positive attitude toward using the relevant product, which generates the behavioral intentions in the consumers to purchase and use the respective product (Hasan et al., 2023; Legris et al., 2003). Therefore, the usage of a particular product by the consumers is determined by two external variables, such as the consumer perception about its usefulness and ease of use.

In the current research, the Technology Acceptance Model is utilized as a means for determining the reasons leading the consumers to purchase the passenger cars that are equipped with hybrid electric engines. In particular, the research concentrates on identifying the potential impact of perceived usefulness and perceived ease of use of hybrid electric vehicles in boosting the popularity and sales of electric cars among the passengers. Accordingly, the research aims to verify the following two hypotheses that are developed based on the Technology Acceptance Model:

- **H_1** There is a positive relationship between the perceived usefulness and purchase intention of passenger cars equipped with hybrid electric vehicles.
- **H_2** There is a positive relationship between the perceived ease of use and purchase intention of passenger cars equipped with electric vehicles.

Innovation Diffusion Theory

Another theory that is suitable for the research purpose is Innovation Diffusion Theory developed by Rogers (1983). The theory also explains the reasons leading the consumers to accept and use the innovations, which is driven by innovation-oriented decision-making processes of the consumers (Kotler & Keller, 2012). Besides, the theory suggests that the consumers are driven to purchase and use innovations when the messages about core characteristics of the relevant innovations are communicated to them by members of a particular social community (Kotler & Keller, 2012). Furthermore, the decision-making process of consumers in case of purchasing innovations is driven by two principal factors, such as compatibility and complexity (Schwarzer, 1999). A factor leading the customers to purchase innovation is compatibility referring to the match between the expected and actual performance of the innovative products being purchased and consumed by the consumers (Schwarzer, 1999). When the consumers experience a high level of match between the expected performance of innovations prior to their consumption and the actual performance of the respective innovations after their consumption, the relevant innovations are accepted by the consumers and their positive experiences are shared with other potential consumers in a particular community (Kotler & Keller, 2012). Accordingly, the current study considers that the compatibility of hybrid electric vehicles

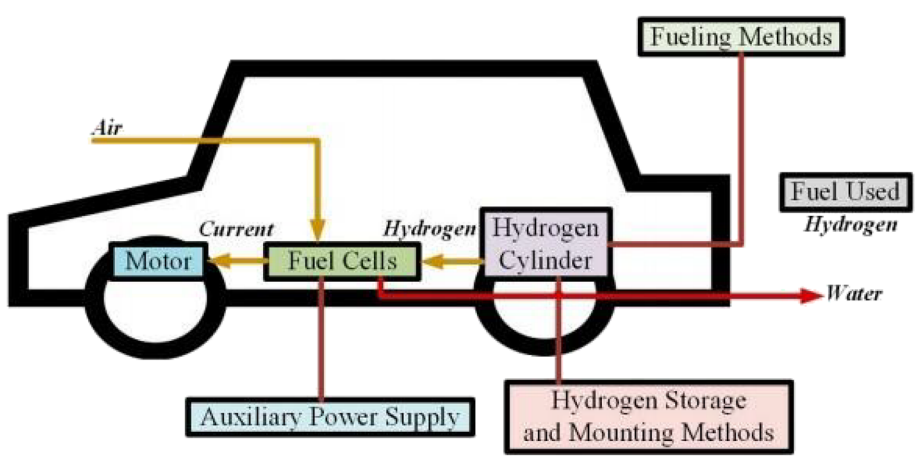

Fig. 4 Configuration of fuel-cell electric vehicles (Camacho & Popa, 2016)

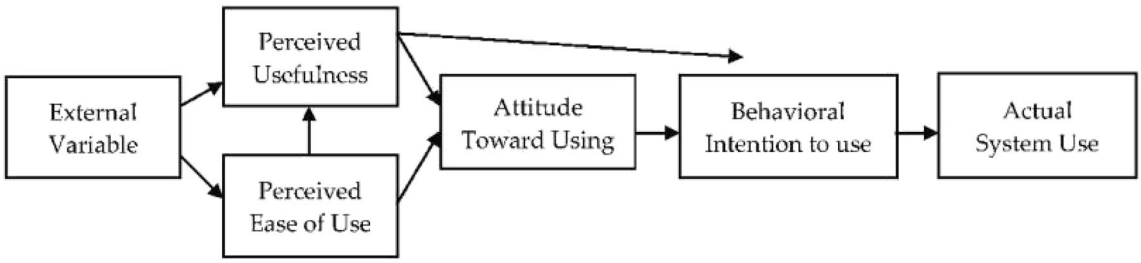

Fig. 5 Technology acceptance model (Davis et al., 1989)

referring to the success of the respective vehicles in producing expected performance and, consequently, satisfying the customers could be a reason generating purchase intention among the potential customers. Thus, the research intends to verify the following hypothesis:

- **H_3** There is a positive relationship between the compatibility of hybrid electric vehicles and customers' purchase intention of the passenger cars equipped with the hybrid electric vehicles.

The complexity is defined as the extent of difficulty of using innovations offered to the customers in a particular social community (Hasan & Shahbaz, 2021; Schwarzer, 1999). The high level of complexity causes the restrictions on the acceptance of innovation by the customers, which reduces their purchase rate (Kotler & Keller, 2012; Yadav & Sagar, 2021). In the case of the hybrid electric vehicles, the lack of complexity in using the passenger vehicles is regarded as one of the reasons leading to the proliferation of the hybrid cars. Therefore, the research aims to verify the following hypothesis:

- **H_4** There is a negative relationship between the complexity of using passenger cars equipped with hybrid electric vehicles and customers' purchase intention of the respective cars.

Previous Research

Schuitema et al., (2013) analyzed the reasons leading the customers to purchase electric vehicles in the UK. The primary data of customer perspectives was gathered from the sample of 2728 electric vehicles' users in the UK (Schuitema et al., 2013). The results of linear regression analysis ascertained that individual environmental awareness was a statistically significant predictor of the purchase decisions of electric vehicles by customers (Schuitema et al., 2013). In this context, the customers' awareness about environmental concerns shapes their purchase behavior by leading them to purchase eco-friendly electric vehicles. Besides, the research findings presented that the financial incentives provided by the government are also detected as an important factor leading the customers to purchase electric vehicles (Ishak, et al., 2023; Schuitema et al., 2013). The government incentives via means of reductions in custom duties for electric cars and taxes imposed on oil and gasoline vehicles are statistically significant factors generating an incentive in consumers to purchase the electric vehicles (Schuitema et al., 2013). Besides, the research findings ascertained that the electric vehicles are not preferred by the certain customers, which is primarily due to their driving range which is significantly less than the conventional vehicles (Schuitema et al., 2013). According to Schuitema et al., (2013), the electric vehicles are purchased by the customers as the customers' environmental awareness and financial incentives provided by the government. Schuitema et al., (2013) argued that if the driving range of electric cars increases compared to that of conventional cars, electric vehicles will dominate the automobile manufacturing industry across the world in the long run.

According to Carley et al. (2013), factors affecting the purchase decisions of customers regarding electric vehicles can be grouped into two clusters, namely internal and external factors. The research conducted by Carley et al. (2013) aimed to determine which internal and external factors affect the purchase decisions of electric vehicles in the USA. The research identified that the internal factors shaping the purchase decisions of customers in regard with electric vehicles include purchase price, battery cost, driving range, and electric vehicle's charging times (Carley et al., 2013). A decline in the purchase prices, battery costs and charging times and an increase in the driving range of electric vehicles are primary determinants of the customers' purchase of electric vehicles in the USA. Besides, there are external factors shaping the customers' purchase decision of electric cars, which include fuel prices, environmental concerns, and networks of charging stations (Carley et al., 2013). An increase in the fuel prices, environmental concerns and networks of charging stations for electric vehicles motivate the customers to prefer electric vehicles over internal combustion engines in the USA (Carley et al., 2013). Additionally, the external factors are

determinants of the purchase preferences of electric vehicles along with the internal factors.

Tu and Yang (2019) conducted a research project to identify and explain the determinants of the customers' preferences of electric vehicles. The primary data about the customer perspectives on the performance, innovative nature and other core characteristics of electric vehicles was assembled from 300 customers of electric vehicles in China (Tu & Yang, 2019). The data found on electric vehicles was analyzed via structural equation model (SEM) (Tu & Yang, 2019). There are three key findings of the relevant research. Firstly, it was identified that the customers' concern about the environmental impact of their purchase choices is a principal determinant of their purchase of electric vehicles (Tu & Yang, 2019). Since the electric vehicles are perceived as eco-friendly means of transportation, the customers' concerns about environmental problems motivate them to purchase electric vehicles in China. Secondly, the research findings indicated that the acceptance of new technologies by customers is another determinant of the purchase of electric vehicles (Tu & Yang, 2019). In particular, electric vehicles are considered as new technologies on which customers lack experience and knowledge. Thus, electric vehicles' acceptance by the customers determines the proliferation of the electric vehicles in a particular community. Finally, the recommendations of other consumers and legal regulations encouraging the use of electric vehicles are not empirical determinants of the purchase intentions of electric vehicles among the customers (Tu & Yang, 2019).

Yan et al., (2019) also assessed the reasons leading the customers to buy electric vehicles in China. In the research, the impact of hedonic and symbolic attributes on the customers' purchase intentions of electric vehicles was analyzed through primary data gathered from 537 customers of electric vehicles in China (Yan et al., 2019). The researchers analyzed primary data via structural equation model and multi-nominal logit model. The findings reflected that hedonic motivation referring to the pleasure of using electric vehicles has a statistically significant impact on the customers' purchase intention of electric vehicles in China (Yan et al., 2019). Besides, symbolic motivation referring to the status obtained by the customers in their community via possessing and using electric vehicles has empirically significant impact on the customers buying decision of electric vehicles (Yan et al., 2019). According to Yan et al. (2019), hedonic and symbolic motivations are determinants of customers' purchase decision of electric vehicles in China; thus, the customers mainly buy the electric vehicles for obtaining the pleasure of driving the respective vehicles and improving their position in the community via shaping the perceptions of community members about their awareness and commitment to the environmental problems.

Research Methodology

Data Collection and Analysis

The present study collects the primary data about the proliferation of the hybrid electric cars in Azerbaijan. Accordingly, the study is based upon the primary data gathered from the sample of the target population. The reasons for using primary data as a means for accomplishing the research objectives in the present study are related to its better reliability and accuracy compared to the secondary data (Saunders et al., 2009).

The research strategy utilized for gathering primary data about the factors leading to the proliferation of hybrid electric cars in Azerbaijan is survey because the survey method enables to gather data from the widely dispersed sample members in a less costly and more time-saving manners (Saunders et al., 2009) (See appendix-B). One of the widespread tools of survey method, questionnaire is formulated for obtaining the primary data from the target population in the present research (see Fig. 6). The questionnaire is composed of three sections and 11 questions. The first section of the questionnaire aims to gather data about the demographic information of the respondents, such as their gender, monthly income, duration of using hybrid electric cars, and brand name of their hybrid electric cars. The second section aims to identify the willingness of customers to purchase hybrid electric cars. The final section of questionnaire concentrates on determining the reasons leading the customers to purchase hybrid electric cars. The established questionnaire is distributed among the target population via means of social media platforms, such as Facebook, LinkedIn and WhatsApp.

The variables for assessing the relationship between the performance of hybrid electric cars and customer behaviors are divided into two clusters. The first one is labelled as independent variables, which included the indicators of the performance of hybrid electric cars in comparison with conventional cars (Table 1). The second one is regarded as dependent variables, which contained indicators of customer behavior toward the hybrid electric cars (Table 1). Thus, the regression analyses are undertaken to illustrate the impact of chosen independent variables on the dependent variables in this study.

Population and Sample

The target population of the present study has two primary characteristics. The individuals who are currently

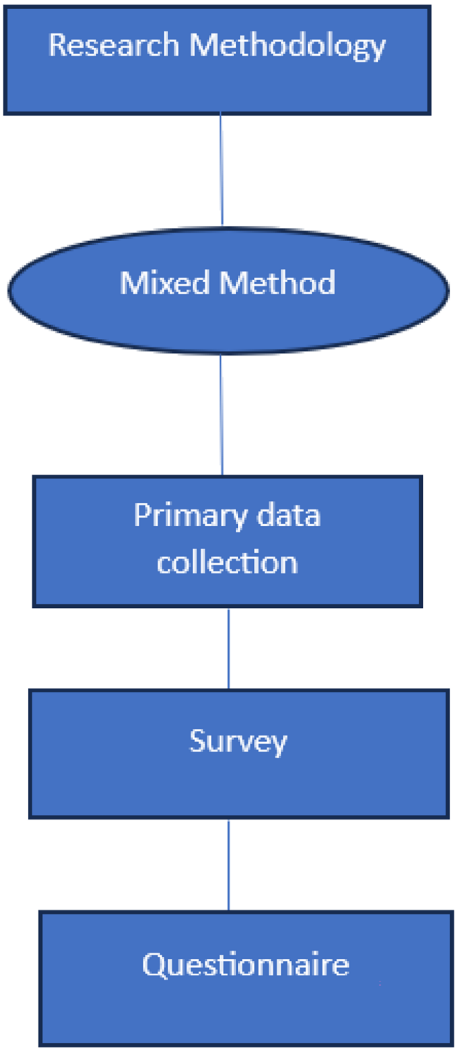

Fig. 6 Research methodology

possessing the hybrid electric cars is the first characteristics of the target population in the present study. The second one is that the individuals who are residing within the domestic environment in Azerbaijan. Thus, the target population of the research is the present users of hybrid electric cars in Azerbaijan. The absence of complete list of the target population makes it difficult to construct the sample of the target population via means of probability sampling method (Saunders et al., 2009). Accordingly, the sample of target population is formulated via means of non-probability sampling method. In particular, the snowball non-probability sampling technique is used to construct the sample for representing the target population in this study (Saunders et al., 2009). In particular, the sample members are asked to share the online questionnaires of the present study with others who are possessing and using hybrid electric vehicles in Azerbaijan. The sample in the study consisted of 121 possessors of hybrid electric cars in Azerbaijan.

This kind of qualitative research non-response bias a big issue. To eliminate or minimize the non-response bias, we used four different techniques, firstly, we thoroughly pretest our survey mediums, to do that we conduct a focus group, we first identify 5–10 participants from the target populations. Finding individuals as close to the target group as feasible allowed us to be a little more flexible. Once a focus group has been established, hold a fruitful discussion under the direction of a moderator to gain more insights regarding the survey's format. This includes the survey's objectives and concepts, the burden on respondents, and how sensitive the subject is to them. We make sure that each focus group participant completes the survey on their own, without watching others do it. They should complete this pre-test survey exactly as they would if they were doing the final version, which might take the shape of an online survey or live interviews with trained interviewers. Most crucial, encourage the participants to think aloud by asking them to describe their thoughts whenever they read or hear one of the questions. Secondly, we avoid rushing and provided our populations more time to complete the survey (3 months). Thirdly, we send reminder to our potential reminders, because we have collected a list of hybrid car users in Azerbaijan from the database and finally, we ensued that all the personal data will be confidential.

By taking a number of preventative actions during the research design phase, it may be possible to rule out ex-ante the likelihood of common method bias appearing in an internet commerce survey. The optimal approach is to collect information about the model's structures from two or more sources. To minimize the common method bias we used three different social media platforms to collect out data.

Findings

Results and Analysis of Demographics

The primary data for determining the reasons leading to the proliferation of hybrid electric cars in Azerbaijan was analyzed and the interpretations of the results of analyses from the descriptive statistics and regression analysis were presented in this chapter.

Figure 7 demonstrates the results for the percentage of the sample members belonging to one of two gender groups. The results of descriptive statistics indicate that the highest percent of sample members belonged to the cluster of male respondents, as 78.5% of the users of hybrid electric cars that participated in the survey of this study highlighted their gender as being male (Fig. 7). Besides,

Table 1 Variables of research

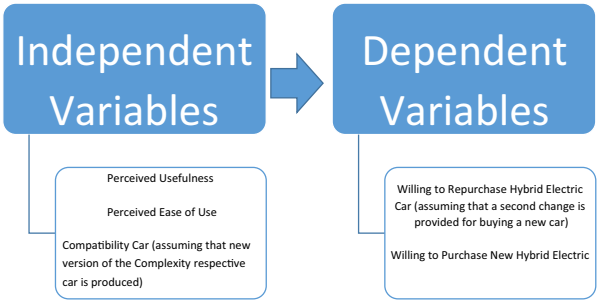

the remaining percentage of sample members belonged to female cluster in the current study. The main reason for such a high disparity between female and male respondents in the sample was related to increasing popularity of driving a car among the female portion of population in Azerbaijan in recent years. There is a gender bias in the drivers in the current domestic community of Azerbaijan, which is primarily due to the cultural norms and perceptions associating driving a car with male portion of population. However, the sample had enough percentage of female drivers who could channel the perceptions of the female customers about the reasons for proliferation of hybrid electric cars in Azerbaijan (Fig. 7).

Figure 8 shows the allocation of customers of hybrid electric cars in Azerbaijan who participated in the survey of this study based on their monthly income. The outcome of descriptive statistics shows that the highest percent of sample members belonged to the second cluster of monthly income, as 38.5% of customers of hybrid electric cars in Azerbaijan who participated in this survey earned the income level between AZN 700 and AZN 1000 (Fig. 8).

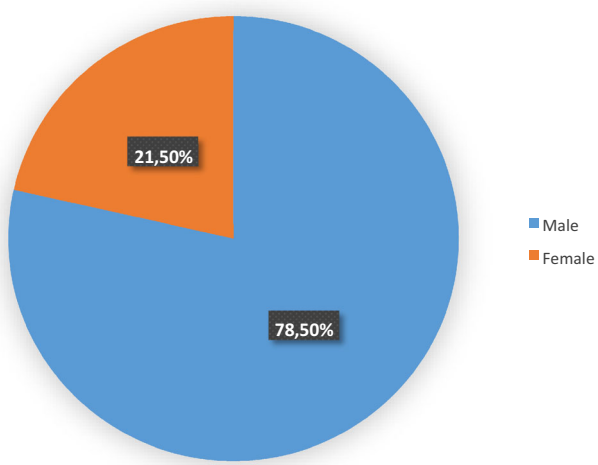

Fig. 7 Grouping the sample based on the gender of sample members (Appendix A1)

The sample also included customers of hybrid electric cars in Azerbaijan, who belonged to various income clusters, including low-, middle-, and high-income levels. Thus, the generated primary data represented the perspectives of individuals from the group of each income level about the reasons leading to the proliferation of hybrid electric cars in Azerbaijan.

Figure 9 displays the allocation of the customers of hybrid electric cars in Azerbaijan who participated in the study based on their duration of using the respective vehicles. The findings indicate that the highest percent of customers responded to the survey belonged to the third cluster of customers because 44.7% of customers highlighted that their usage of hybrid electric cars ranged between 13 and 18 months at the time of assembling data for this study (Fig. 9). Furthermore, only 6.6% of customers of hybrid electric cars in Azerbaijan that participated in the survey of this study were less experienced about performance indicators of hybrid electric cars due to their current purchase of hybrid electric cars (Fig. 9). As more than 97% of participants in the survey have been using hybrid electric cars over 6 months at the time of assembling primary data for this study, it could be assumed that the sample of customers possessing hybrid electric cars in Azerbaijan was experienced enough to represent the target population via indicating their extent of satisfaction with the performance of hybrid electric cars.

Figure 10 illustrates the results of allocating the sample into clusters based on the type of hybrid electric cars possessed by the relevant customers. The outcome of descriptive statistics illustrates that 47.9% of sample members possessed Toyota branded hybrid electric cars at the time of assembling primary data for this study (Fig. 10). There were also the significant percent of the customers of Ford branded hybrid electric cars in the sample of this study, as 21.5% of sample members possessed Ford labelled hybrid electric cars in the process of assembling primary data for this study (Fig. 10). The main reason that led to the disparity between the clusters of customers of Toyota and Ford branded hybrid electric cars and other brand hybrid electric cars could be due to the popularity of Toyota and Ford brands among the customers in Azerbaijan. The customers in Azerbaijan could prefer the Toyota and Ford branded hybrid electric cars over others because of their brand value, as Toyota and Ford corporations have the brand reputation of high quality and performance in the global automobile industry in regard with hybrid electric cars compared to other hybrid electric cars manufacturing brand companies. Thus, the research findings in the study primarily represent the perspectives of customers of Toyota or Ford branded hybrid electric cars in Azerbaijan.

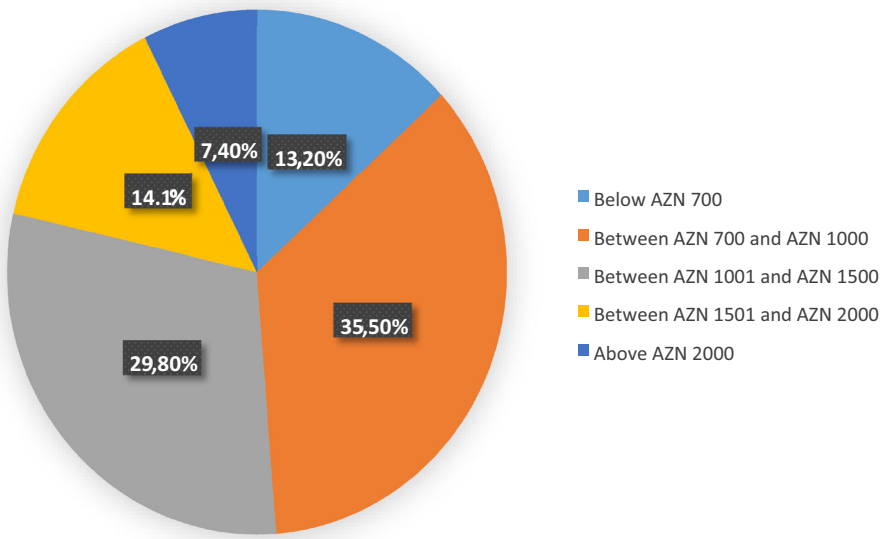

Fig. 8 Allocation of sample based on their monthly income (Appendix A1)

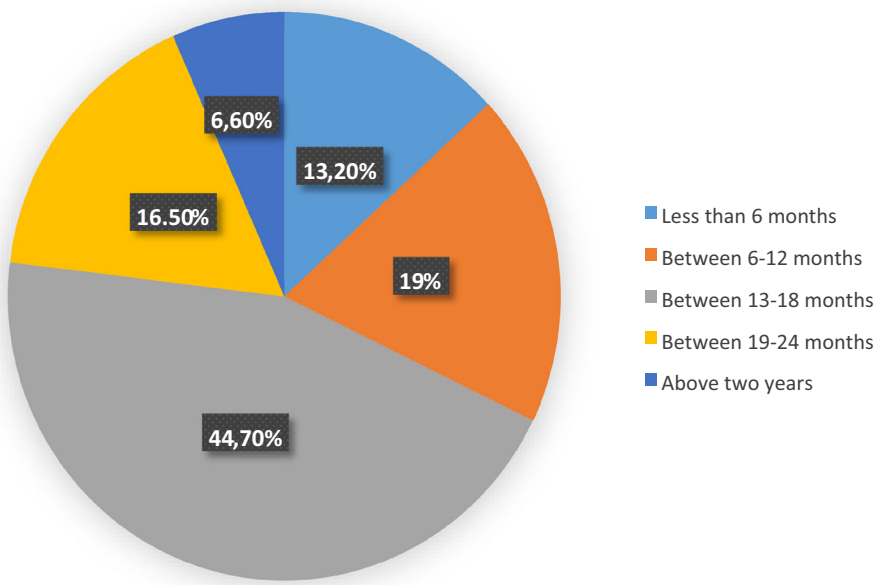

Fig. 9 Allocation of sample based on their duration of using hybrid electric cars (Appendix A1)

Results of Regression Analyses

The reasons leading to the proliferation of hybrid electric cars among the customers in Azerbaijan were identified through linear regression analysis in the study. Hence, the regression model is generated for each customer behavior in the current study to analyze how the performance indicators of hybrid electric cars affect the customer behavior in Azerbaijan. The first framework of regression model is assumed to identify the impact of performance-related characteristics of hybrid electric cars on the customer behavior in Azerbaijan. The respective framework is shown in Table 2:

Table 3 illustrates the outcomes of the data analysis for first regression framework.

Table 3 illustrates the results of data analysis for the initial regression model, including *r*-square, coefficients and significance levels of dependent variables. *R*-Square of model is estimated at 0.956, implying that the independent variable in the constructed model predicts 95.6% of alterations in the chosen dependent variable, which is more than sufficient level of *R*-square, like 0.7 (Table 3). Thus, it could be assumed that our first regression model in the study predicts the changes in the consumer behavior because the selected independent variables predict the alterations in repurchasing behavior of customers of hybrid electric cars. In the constructed model, two independent

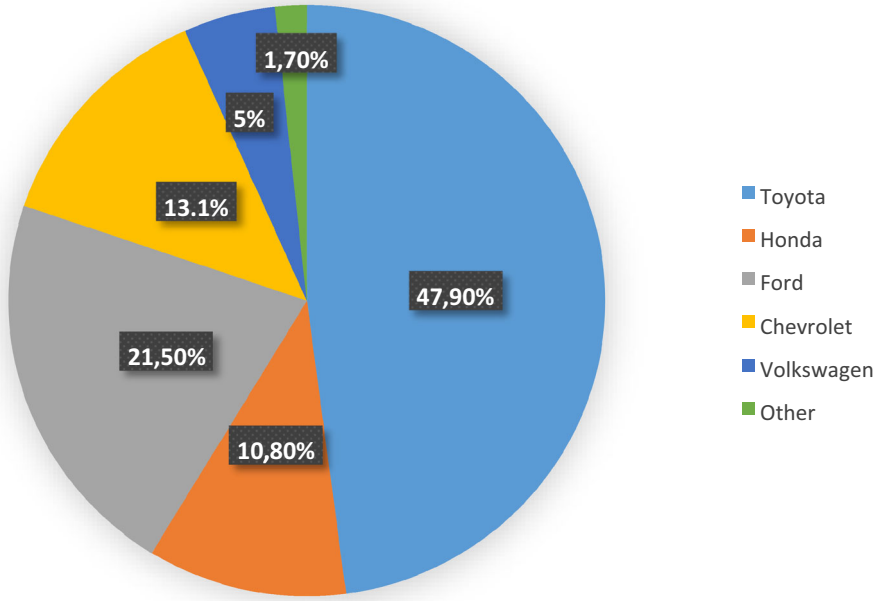

Fig. 10 Allocation of sample based on type of hybrid electric cars possessed by relevant customers (Appendix A1)

Table 2 Regression model 1

Indicator of consumer behavior model (dependent variable)	Indicators of performance-oriented characteristics of hybrid electric cars	Regression model
Willing to Repurchase Hybrid Electric Cars (Y_r)	Perceived Usefulness (XX_{uu}) Perceived Ease of Use (XX_{ee}) Compatibility (XX_{cc}) Complexity (XX_{dd})	$YY_{tt} = \alpha\alpha_0 + \beta\beta_1 XX_{uu}$ ββ3XXcc + $\beta\beta_2 XX_{ee} + \beta\beta_4 XX_{dd} + \varepsilon\varepsilon$

a = Intercept, b = Slope of lines and εε = Regression residual

Table 3 Outcomes of regression model 1 (Appendix A2)

Variables	Coefficients	Level of significance
Perceived usefulness	0.927	< 0.001
Perceived ease of use	0.064	0.027
Compatibility	−0.019	0.541
Complexity	0.035	0.138
R-square observation number	0.956121	

variables, such as perceived usefulness and perceived ease of use have significance levels less than 0.05, meaning that the perceived usefulness and perceived ease of use as two indicators of performance of hybrid electric cars have empirically significant connection with repurchasing behavior of customers (Table 3). The coefficients of those predictors, such as perceived usefulness and perceived ease of use of hybrid electric cars are 0.927 and 0.064, implying the positive correlation between the respective predictors and repurchasing behavior of customers (Table 3). In this regard, a growth in the level of either perceived usefulness or perceived ease of use of hybrid electric cars are also accompanied by a growth in the repurchasing behavior of customers of the respective cars. Therefore, H_1 of study emphasizing the existence of statistically positive connection between perceived usefulness and purchase intention of customers of hybrid electric cars and H_2 of study highlighting the existence of empirically positive nexus between perceived ease of use and purchase intention of customers of the respective cars in Azerbaijan are verified in the present study. Accordingly, it can be assumed that the consumers' intention of repurchasing hybrid electric cars in Azerbaijan is shaped by the perceived usefulness and perceived ease of use of the respective vehicles.

The second regression model is developed to appraise the influence of performance-indicators of hybrid electric cars on another characteristics of consumer behavior, such as purchase of new versions of the respective cars. The

framework of the relevant regression model is illustrated in Table 4:

The outcomes of the second regression framework are presented in Table 5. The *R*-Square of the framework is 0.748, implying that the chosen performance-indicators of hybrid electric cars, such as perceived usefulness and ease of use, compatibility and complexity predict 74.8% of the modifications in the purchase intention of consumers in case of availability of new and innovative versions of hybrid electric cars (Table 5). Thus, it can be assumed that the developed framework is suitable to demonstrate the connection between performance of hybrid electric cars and customers' willingness to purchase the corresponding cars. There are three predictors that have statistically significant connection with the purchase intention of customers in case of availability of new and innovative versions of hybrid electric cars in the marketplace, which are perceived usefulness and ease of use and compatibility of the respective cars because their significance levels are less than 0.05 (Table 5). In addition, the coefficients of relevant predictors are 0.311, 0.221 and 0.443, respectively, meaning the positive correlation between them and the customers' purchase intention of new and innovative versions of hybrid electric cars. Therefore, the positive growth in the level of perceived usefulness, perceived ease of use or compatibility of hybrid electric cars is accompanied by a positive improvement in the customers' purchase intentions of hybrid electric cars. Accordingly, in addition to H_1 and H_2, H_3 of the study, which highlights the positive nexus between customers' purchase intentions and compatibility of hybrid electric cars are verified in the study. Thus, it can be assumed that the customers' purchase intentions of new and innovative hybrid electric cars are positively affected by the perceived usefulness, perceived ease of use and extent of match between actual and expected performance (compatibility) of the respective vehicles.

The last regression framework is built to bring out the impact of performance-indicators of hybrid electric cars on another aspect of consumer behavior, such as their likelihood of recommending the hybrid electric cars to others. The third regression model is illustrated in Table 6:

The results of the third regression framework are demonstrated at Table 7. The developed regression model is capable of forecasting the modifications in the dependent variable, such as the willingness of customers to recommend hybrid electric cars to other customers because *R*-Square of model is 0.895 (Table 7). Therefore, 89.5% of alterations in the level of customers' willingness to suggest the hybrid electric cars to other customers can be predicted by the chosen indicators of performance of the respective cars (Table 7). Besides, there are three predictors that are empirically related to the customers' likelihood of recommending hybrid electric cars, which are perceived usefulness, perceived ease of use and compatibility of the corresponding cars, as their significance levels are less than 0.05 (Table 7). Also, their coefficients are 0.023, 0.880, 0.092, meaning the positive nexus between them and customers' willingness to suggest hybrid electric cars to others (Table 7). The positive coefficients of three predictors denote that a growth in the level of one of the relevant predictors is accompanied by a growth in the level of customers' intention to recommend the hybrid electric cars to others. Therefore, the first three hypotheses of research, H_1 H_2, and H_3 are verified because of the statistically positive and empirically significant connection between perceived usefulness, perceived ease of use, and compatibility of hybrid electric cars and the customers' willingness to suggest the respective cars to others. In this regard, it can be claimed that the customers' likelihood of offering hybrid electric cars to other drivers is determined by their perceptions about usefulness and ease of use of the respective cars and the match between expected and actual performance of the corresponding cars.

Conclusion and Recommendation

Discussion

The research outcomes indicated that the customers' perceptions about the usefulness of hybrid electric cars in Azerbaijan were a critical determinant of the consumers' purchase intentions of the respective vehicles. In particular, the thoughts of consumers about the hybrid electric cars as

Table 4 Regression model 2

Indicator of consumer behavior model (dependent variable)	Indicators of performance-oriented characteristics of hybrid electric cars	Regression model
Willing to Purchase new versions of Hybrid Electric Cars (YY_{pp})	Perceived Usefulness (XX_{uu}) Perceived Ease of Use (XX_{ee}) Compatibility (XX_{cc}) Complexity (XX_{dd})	$YY_{pp} = \alpha\alpha_0 + \beta\beta_1 XX_{uu} + \beta\beta_2 XX_{ee} + \ + \beta\beta_4 XX_{dd} + \varepsilon\varepsilon$ ββ3XXcc

a = Intercept, b = Slope of lines and ε = Regression residual

Table 5 Outcomes of regression model 2 (Appendix A2)

Variables	Coefficients	Level of significance
Perceived usefulness	0.311	< 0.001
Perceived ease of use	0.221	< 0.001
Compatibility	0.443	< 0.001
Complexity	−0.014	0.801
R-square	0.748	
Observation number	121	

Table 7 Outcomes of regression model 3 (Appendix A2)

Variables	Coefficients	Level of significance
Perceived usefulness	0.023	0.681
Perceived ease of use	0.880	< 0.001
Compatibility	0.092	0.007
Complexity	−0.026	0.511
R-square	0.895	
Observation number	121	

being a useful means of transporting them to their destinations affect their intention of repurchasing exactly the same vehicles or replacing them with their new and innovative types, this finding is in line with the previous literature (see, Albatayneh et al., 2020; Hasan & Islam, 2022). Besides, the research findings displayed that the customers' perceptions about ease of use of hybrid electric cars were also a critical determinant of customers' purchase intentions. In this regard, once customers perceive that using hybrid electric cars can be easily learned by its users, the customers' willingness to repurchase the respective cars, to buy their new versions or recommending them to other customers increase relatively. There are lots of reason could be involved for this decision and recommendation, one of them is the change of the weight. Lower passenger safety and design durability were the results of a weight reduction of automobiles that was excessively drastic. Vehicles started to come with various safety systems, such as stability control systems, automatic braking systems (ABS), and safety airbags, in the 1980s and 1990s in an effort to increase passenger safety. Additionally, a number of passive safety devices were created. The end of the twentieth century saw an increase in vehicle weight as a result of the development of new safety systems and their installation on vehicles.

Internal combustion engine vehicles of the same model typically see minimal weight changes. If cars are fitted with engines of varied sizes, modifications, and devices, there will typically be slight weight adjustments. Due to the varied sizes of their goods compartments, commercial vehicles' weights might fluctuate.

The average fuel consumption of an automobile might fluctuate if its weight changes. Such a pattern is typically seen while driving in urban environments, where the car is frequently accelerated and halted. According to an analysis of annual variations in fuel consumption for cars, the average fuel consumption for cars significantly dropped in the middle of the 1980s, although this tendency was less pronounced subsequently (Heavenrich, 2008). The historical development of automobiles has shown a similar tendency in terms of weight loss; the vehicles produced between 1981 and 1987 experienced the smallest weight loss. The typical weight of later-produced cars tended to rise once more. Because of the introduction of contemporary engine designs, the weight growth tendency does not significantly affect the acceleration dynamics of automobiles of new designs (Heavenrich, 2008).

Electric vehicle (EV) batteries have very high energy density per unit weight, ranging from 60 to 96 $Whkg^{-1}$. Lithium batteries with a 20 kWh capacity might weigh up to 200 kg in a vehicle. Batteries can be very expensive, costing up to 1000 EUR per kWh^{-1} (Huh et al., 2011). As it is economically unproductive to carry the extra weight of the batteries, it is advisable to choose a custom-made pack of electric vehicle batteries in order to lower the cost of automobiles.

In this case, the research demonstrated that the theory of Technology Acceptance can explain the nexus between the performance indicators of hybrid electric cars and customers' purchase intentions of the respective vehicles due to the relationship between perceived usefulness and ease

Table 6 Regression model 3

Indicator of consumer behavior model (dependent variable)	Indicators of performance-oriented characteristics of hybrid electric cars	Regression model
Willing to Suggest Hybrid Electric Cars (YY_{ss})	Perceived Usefulness (XX_{uu})Perceived Ease of Use (XX_{ee})Compatibility (XX_{cc})Complexity (XX_{dd})	$YY_{ss} = \alpha\alpha_0 + \beta\beta_1 XX_{uu} + \beta\beta_2 XX_{ee} + \beta\beta 3XXcc + \beta\beta_4 XX_{dd} + \varepsilon\varepsilon$

a = Intercept, b = Slope of lines and ε = Regression residual

of use and consumer behavior in regard with purchasing hybrid electric vehicles in Azerbaijan.

Finally, the thoughts of customers about compatibility of hybrid electric cars also affect their purchase intentions as the congruence between actual and expected performance of hybrid electric cars increase their willingness to repurchase the same hybrid electric cars, to replace their current hybrid electric cars with their new and innovative versions or to suggest the respective cars to other customers. However, the research could not identify the empirically significant nexus between complexity and customers' purchase intentions. Thus, the last hypothesis of the study was rejected due to the absence of a relationship between the respective predictor and three aspects of consumer behavior, such as repurchase of hybrid electric cars, purchase of new versions of hybrid electric cars and recommending the respective cars to other customers. Therefore, the theory of Innovation Diffusion provides the partial explanation for the relationship between performance of hybrid electric cars and customers' purchase intentions as information spread about the balance between actual and expected performance of hybrid cars is determined as a critical factor leading the customers to repurchase hybrid electric cars, to buy their new and innovative versions and to suggest them to other customers. In general, the research identified that the customer perceptions about three performance indicators of hybrid electric cars, such as their usefulness, ease of use and compatibility were detected as primary reasons leading to the proliferation of the corresponding cars in Azerbaijan. To mitigate the 'common method bias-ness problem', we use Harman's single factor score.[1]

Implications

The main implications of electric vehicle are as follows-

1. *Zero emissions* These automobiles don't release any nitrogen dioxide (NO_2) or carbon dioxide (CO_2). Although the creation of batteries has a negative impact on carbon footprint, the manufacturing techniques also tend to be more environmentally friendly.
2. *Simplicity* There are fewer engine components in Electric Vehicles (EVs), which results in significantly less expensive maintenance. The engines are more straightforward and smaller; they do not require a cooling circuit, nor are a gearshift, clutch, or components that lessen the engine noise required.
3. *Reliability* Electric vehicles experience fewer problems because they have fewer and simpler components. In addition, engine explosions, vibrations, and gasoline corrosion do not cause intrinsic wear and tear.
4. *Cost* As compared to maintenance and fuel costs of conventional combustion cars, the cost of the electric vehicle and the power required is significantly lower. Moreover, EVs have a much lower energy cost per kilometre.
5. *Comfort* Travelling in EVs is more relaxing as there are no engine vibrations or noises.
6. *Efficiency* Electric vehicles are more efficient than conventional cars. Compared to diesel vehicles, which vary from 25 to 37%, gasoline vehicles' total well to wheel (WTW) efficiency, for instance, ranges from 11 to 27%. The WTW efficiency of EVs powered by natural gas in comparison, ranges from 13 to 31%, while EVs powered by renewable energy show an overall efficiency of up to 70%.

Limitations of the Study and Future Research Directions

The study has certain limitations that should be addressed in future research for further elaboration of the reasons for the proliferation of electric cars. The first one is that the research findings of the study lack the expert views, especially the perceptions of qualified persons in the field of hybrid electric vehicles and internal combustion engines. Gathering primary data from engineers, designers, and other persons working in the production process of hybrid electric vehicles and internal combustion engines could enable them to determine performance differences between the respective vehicles and to identify reasons leading the customers to prefer hybrid electric cars in recent years. The second limitation of study is the sample size which could be increased for including more members of the target population into the data collecting process for reliably and accurately. The current study had the sample size of 121 customers, which was enough to generate certain conclusions about the nexus between hybrid electric vehicles and customers' purchase intentions. However, its findings could be improved via gathering data from a large sample base, grouping the sample based on their demographic characteristics with subsequent comparison between the responses regarding the performance of hybrid electric vehicles and their purchase intentions of hybrid electric cars.

Conclusion

In the current automobile market, electric cars have gained popularity among the customers. In particular, the customer preferences of electric cars have increased over the recent

[1] Harman's single factor score results are available upon request.

years in contrast to the conventional cars equipped with internal combustion engines. The increasing popularity of electric vehicles among the consumers has been an unexpected outcome in the automobile manufacturing industry because of their performance constraints. In this regard, the customers disregarded electric vehicles as a means of transportation in the past due to its restricted driving range, limited speed, time-consuming charging process and expensive maintenance costs. Therefore, the increasing popularity of electric vehicles has been an unexpected change in the customer preferences due to the constraints in its performance and functionality compared to the internal combustion engines. Hence, the primary aim of the research was to determine the reasons directing the customers to buy and use electric vehicles despite their performance and function related limitations in comparison with the conventional vehicles.

The primary focus of study is to identify the factors motivating the consumers to purchase one of the commonly used types of electric vehicles, hybrid electric cars. In this study, the hypotheses of research were constructed via two theories. The first theory of study was Technology Acceptance Theory which was used for identifying the relationship between perceived usefulness and ease of use of hybrid electric cars and customers' purchase intention of the respective cars in Azerbaijan. The second theory of study was Innovation Diffusion Theory, which was used for identifying the relationship between compatibility and complexity of hybrid electric cars and the customers' purchase intention of the respective cars in Azerbaijan.

In this study, the primary data of customers' perspectives on performance of hybrid electric vehicles was collected through questionnaires. Besides, the sample included 121 customers of hybrid electric vehicles, whose responses were analyzed through descriptive and regression analyses. While independent variables of study included indicators of the performance of hybrid electric cars, the dependent variables included the forms of consumer behavior.

The findings of study highlighted that the customer perceptions about the usefulness, ease of use and compatibility of hybrid electric cars are determinants of the customers' purchase intentions of the respective cars in Azerbaijan. Besides, the research findings presented that the customer perceptions about usefulness, ease of use and compatibility of hybrid electric vehicles are primary reasons leading the customers to purchase the respective cars in Azerbaijan. In case of complexity of hybrid electric vehicles, the research findings identified the absence of empirically significant nexus between the complexity of using hybrid electric vehicles and customers' intention to purchase the respective cars in Azerbaijan.

Appendix A. Data Analysis Results

Results of Descriptive Statistics

Gender

		Frequency	Percent	Valid percent	Cumulative percent
Valid	Male	95	78.5	78.5	78.5
	Female	26	21.5	21.5	100.0
	Total	121	100.0	100.0	

Income level

		Frequency	Percent	Valid percent	Cumulative percent
Valid	Below AZN 700	16	13.2	13.2	13.2
	Between AZN 700 and AZN 1000	43	35.5	35.5	48.8
	Between AZN 1001 and AZN 1500	36	29.8	29.8	78.5
	Between AZN 1501 and AZN 2000	17	14.1	14.1	92.6
	Above AZN 2000	9	7.4	7.4	100.0
	Total	121	100.0	100.0	

Duration of possessing hybrid electric car

		Frequency	Percent	Valid percent	Cumulative percent
Valid	Less than 6 months	16	13.2	13.2	13.2
	Between 6 and 12 months	23	19.0	19.0	32.2
	Between 13 and 18 months	54	44.7	44.7	76.9
	Between 19 and 24 months	20	16.5	16.5	93.4
	Above 2 years	8	6.6	6.6	100.0
	Total	121	100.0	100.0	

Brand name of hybrid electric car being used					
		Frequency	Percent	Valid percent	Cumulative percent
Valid	Toyota	58	47.9	47.9	47.9
	Honda	13	10.8	10.8	58.7
	Ford	26	21.5	21.5	80.2
	Chevrolet	16	13.1	13.1	93.3
	Volkswagen	6	5.0	5.0	98.3
	Other	2	1.7	1.7	100.0
	Total	121	100.0	100.0	

Results of Regression Analyses

Regression Model 1

Dependent Variable: Repurchasing Your Current Hybrid Electric Car (HEB) Again

Model summary				
Model	*R*	*R* square	Adjusted *R* square	Std. error of the estimate
1	0.978[a]	0.956	0.955	0.179

a. Predictors: (constant), complexity, perceived ease of use, compatibility, perceived usefulness

Regression Model 2

Dependent Variable: Purchasing New HEC

Model summary				
Model	*R*	*R* square	Adjusted *R* square	Std. error of the estimate
1	0.865[a]	0.748	0.740	0.408

a. Predictors: (constant), complexity, perceived ease of use, compatibility, perceived usefulness

Coefficients[a]								
Model		Unstandardized coefficients		Standardized coefficients	*t*	Sig	95.0% confidence interval for B	
		B	Std. error	Beta			Lower bound	Upper bound
1	(Constant)	−0.031	0.046		−0.665	0.507	−0.122	0.061
	Perceived Usefulness	0.927	0.035	0.918	26.511	< 0.001	0.857	0.996
	Perceived Ease of Use	0.064	0.029	0.065	2.245	0.027	0.008	0.120
	Compatibility	−0.019	0.031	−0.018	−0.613	0.541	−0.082	0.043
	Complexity	0.035	0.024	0.038	1.495	0.138	−0.011	0.082

a. Dependent variable: repurchasing current HEC

Coefficients[a]								
Model		Unstandardized coefficients		Standardized coefficients	*t*	Sig	95.0% confidence interval for B	
		B	Std. Error	Beta			Lower bound	Upper bound
1	(Constant)	0.136	0.105		1.303	0.195	−0.071	0.344
	PerceivedUsefullness	0.311	0.080	0.325	3.917	< 0.001	0.154	0.469
	PerceivedEaseofUse	0.221	0.065	0.236	3.410	< 0.001	0.093	0.350
	Compatibility	0.443	0.072	0.425	6.187	< 0.001	0.301	0.585
	Complexity	−0.014	0.054	−0.016	−0.253	0.801	−0.120	0.093

a. Dependent variable: purchasing new HEC

Regression Model 3

Dependent Variable: Recommending HEC to Other Customers

		Model summary		
Model	*R*	*R* square	Adjusted *R* square	Std. error of the estimate
1	0.946[a]	0.895	0.891	0.276

a. Predictors: (constant), complexity, compatibility, perceived ease of use, perceived usefulness

Coefficients[a]								
Model		Unstandardized coefficients		Standardized coefficients	*t*	Sig	95.0% confidence interval for B	
		B	Std. Error	Beta			Lower bound	Upper bound
1	(Constant)	0.025	0.070		0.350	0.727	−0.114	0.164
	PerceivedUsefullness	0.023	0.057	0.023	0.412	0.681	−0.089	0.136
	PerceivedEaseofUse	0.880	0.052	0.895	16.791	< 0.001	0.776	0.983
	Compatibility	0.092	0.033	0.101	2.741	0.007	0.025	0.158
	Complexity	−0.026	0.040	-0.028	−0.660	0.511	−0.106	0.053

a. Dependent variable: recommending HEC

Appendix B. Questionnaire

Section 1: Demographics

(i) Gender
(ii) Male
(iii) Female
(iv) Preferring not to highlight
(v) Level of Monthly Income (considering AZN 1 = USD 1.7)
(vi) Below AZN 700
(vii) Between AZN 700 and AZN 1000
(viii) Between AZN 1001 and AZN 1500
(ix) Between AZN 1501 and AZN 2000
(x) Above AZN 2000
(xi) How long have been using hybrid electric vehicles?
(xii) Less than 6 months
(xiii) Between 6 and 12 months
(xiv) Between 13 and 18 months
(xv) Between 19 and 24 months
(xvi) Above two years
(xvii) Which brand hybrid electric car do you currently possess?
(xviii) Toyota
(xix) Honda
(xx) Ford
(xxi) Chevrolet
(xxii) Volkswagen
(xxiii) Other

Section 2: Consumer Purchase Intentions

Please, select the suitable column best describing your extent of agreement with below statements?

	Strongly agree	Agree	Neutral	Disagree	Strongly disagree
5. Willing to repurchase hybrid electric cars again (if you have a second chance for buying another car at the similar price and functions)					
6. Willing to buy new hybrid electric cars (once new and innovative versions of hybrid electric cars are produced and offered to customers)					

Table k continued

	Strongly agree	Agree	Neutral	Disagree	Strongly disagree
7. Likely to recommend hybrid electric cars to others (such as relatives, colleagues, friends)					

Section 3: Characteristics of Hybrid Electric Cars

Please, select the suitable column best describing your extent of agreement with below statements?

	Strongly agree	Agree	Neutral	Disagree	Strongly disagree
8. The hybrid electric cars as useful means of transportation in case of reaching to the destinations (Perceived usefulness)					
9. The hybrid electric cars as convenient for me to learn and use its functionalities and operations (perceived ease of use)					
10. The performance of hybrid electric cars as highly efficient compared to the performance conventional cars (compatibility)					

Appendix continued

	Strongly agree	Agree	Neutral	Disagree	Strongly disagree
11. The speed of hybrid electric cars as limited function of the respective cars compared to the conventional cars (complexity)					

Funding No funding was involved.

Availability of Data and Materials All of data and materials are available.

Declarations

Conflict of interest No conflict of interest.

Ethical Approval Ethical Approval have taken.

Consent to Participate Interview participants consent was taken.

Consent to Publish All authors consent to publish this research paper was taken.

References

Albatayneh, A., Assaf, M. N., Alterman, D., & Jaradat, M. (2020). Comparison of the overall energy efficiency for internal combustion engine vehicles and electric vehicles. *Environmental Climate Technology, 24*, 669–680.

Angeles, A., Perez-Encinas, A., & Villanueva, C. E. (2022). Characterizing organizational lifecycle through strategic and structural flexibility: Insights from MSMEs in Mexico. *Global Journal of Flexible Systems Management, 23*(2), 271-290.

Berjoza, D., & Jurgena, I. (2017). Effects of change in the weight of electric vehicles on their performance characteristics. *Agronomy Research, 15*, 952–963.

Camacho, F., & Popa, L. (2016). Fast charging and smart charging tests for electric vehicles batteries using renewable energy. *Oil and Gas Science and Technologies, 71*, 13–25.

Carley, S., Krause, R., Lane, B., & Graham, J. (2013). Intent to purchase a plug-in electric vehicle: A survey of early impressions in large US cities. *Transportation Research Part, 18*, 39–45.

D'Adamo, I., Gastaldi, M., Piccioni, J., & Rosa, P. (2023). The role of automotive flexibility in supporting the diffusion of sustainable mobility initiatives: A stakeholder attitudes assessment. *Global Journal of Flexible Systems Management, 24*(3), 459–481.

Davis, F. D., Bagozzi, R. P., & Warshaw, P. R. (1989). User acceptance of computer technology: A comparison of two theoretical models. *Management Science, 35*(8), 982–1003.

Ellingsen, L., Singhand, B., & Stumman, A. H. (2016). The size and range effect: Lifecycle greenhouse gas emissions of electric vehicles. *Environmental Research Letters, 11*, 32–45.

Grunditz, A., & Thiringer, T. (2016). Performance analysis of current BEVs based on a comprehensive review of specifications. *IEEE Transactions on Transportation Electrification, 2*, 270–289.

Hasan, F. (2020). How sustainability reporting has changed over the years for companies listed in oil and gas sector. *International Journal of Critical Accounting, 11*(6), 520–557.

Hasan, F., Bellenstedt, M. F. R., & Islam, M. R. (2023). The impact of demand and supply disruptions during the Covid-19 crisis on firm productivity. *Global Journal of Flexible Systems Management, 24*(1), 87–105.

Hasan, F., Hasan, Md. Z., & Islam, M. R. (2022a). COVID-19 movement control effect on the socio-economy: Evidence from Bangladesh manufacture industry. *International Journal of Critical Accounting, 12*(6), 531–553.

Hasan, F., Hossen, R., & Shahbaz, A. A. (2021). How steel industry has been affected due to trade war between the USA and China. *International Journal of Critical Accounting, 12*(4), 348–368.

Hasan, F., & Islam, M. R. (2022). New energy vehicles from the perspective of market and environment. *Journal of Business Strategy, Finance and Management, 4*(1), 38–51.

Hasan, F., Islam, M. R., & Ishrat, F. (2022b). COVID-19 pandemic impact on the supply chains of the UK-based multinational manufacturing companies. *Business Ethics and Leadership, 6*(2), 44–67.

Hasan, F., & Shahbaz, A. A. (2021). COVID-19 and two different stock markets: An event study analysis. *The Journal of Prediction Markets, 15*(2), 3–18.

He, L., Chen, W., & Conzelmann, G. (2012). Impact of vehicle usage on consumer choice of hybrid electric vehicles. *The World Electric Vehicle Journal, 2*(3), 208–214.

Heavenrich, R. M. (2008). *Light-duty automotive technology and fuel economy trends: 1975 through 2005 (EPA420-R-05-001) office of transportation and air quality's (OTAQ)*. Environmental Protection Agency.

Hidrue, M. K., Parsons, G. R., Kempton, W., & Gardner, M. P. (2011). Willingness to pay for electric vehicles and their attributes. *Resources Energy Economy, 33*, 686–705.

Huh, J., Lee, W., Cho, G.-H., Lee, B. & Rim, C.-T. (2011). Characterization of novel inductive power transfer systems for on-line electric vehicles. Daejeon, Korea, 978–1–4244–8085-2/11.2011 IEEE–1975–1979.

IEA. (2021). *Trends and developments in electric vehicle markets*. Available at: https://www.iea.org/reports/global-ev-outlook-2021/trends-and-developments-in-electricvehicle-markets.

Ishak, S., Shaharudin, M. R., Salim, N. A. M., Zainoddin, A. Z., & Deng, Z. (2023). The effect of supply chain adaptive strategies during the COVID-19 pandemic on firm performance in malaysia's semiconductor industries. *Global Journal of Flexible Systems Management, 24*(3), 439–458.

Jin, L., & Slowik, P. (2019). Literature review of electric vehicle consumer awareness and outreach activities. *International Council of Clean Technologies, 3*, 1–27.

Kang, E., Brown, T., Recker, W., & Samuelsen, G. S. (2014). Refueling hydrogen fuel cell vehicles with 68 proposed refueling stations in California: Measuring deviations from daily travel patterns. *International Journal of Hydrogen Energy, 39*, 444–449.

Kim, H., & Kum, D. (2016). Comprehensive design methodology of input- and output-split hybrid electric vehicles: Search of optimal configuration. *International Journal of Electric and Hybrid Vehicles, 7*(2), 912–923.

Kotler, P., & Keller, K. (2012). *Marketing management*. Prentice Hall.

Legris, P., Ingham, J., & Collerette, P. (2003). Why do people use information technology? A critical review of the technology acceptance model. *Information Management, 40*(3), 191–204.

Rogers, E. M. (1983). *Diffusion of innovations*. Free Press.

Saunders, M., Lewis, P., & Thornhill, A. (2009). *Research methods for business students*. Prentice Hall.

Schlüter, J., & Weyer, J. (2019). Car sharing as a means to raise acceptance of electric vehicles: An empirical study on regime change in automobility. *Transportation Research Part f: Traffic Psychology and Behaviour, 60*, 185–201.

Schuitema, G., Anable, J., Skippon, S., & Kinnear, N. (2013). The role of instrumental, hedonic and symbolic attributes in the intention to adopt electric vehicles. *International Journal of Electric and Hybrid Vehicles, 4*(8), 39–49.

Schwarzer, R. (1999). Optimism, goals, and threats: How to conceptualize self-regulatory processes in the adoption and maintenance of health behaviors. *Psychological Health, 3*, 759766.

Tu, J. C., & Yang, C. (2019). Key factors influencing consumers' purchase of electric vehicles. *Sustainability, 11*, 1–22.

Yadav, A., & Sagar, M. (2021). Modified total interpretive structural modeling of marketing flexibility factors for Indian telecommunications service providers. *Global Journal of Flexible Systems Management,* 22(4), 307-330.

Yan, Q., Qin, G., Zhang, M., & Xiao, W. (2019). Research on real purchasing behavior analysis of electric cars in Beijing based on structural equation modeling and multinomial logit model. *Sustainability, 11*, 1–15.

Yang, S., Zhang, D., Fu, J., Fan, S., & Ji, Y. (2018). Market cultivation of electric vehicles in china: a survey based on consumer behavior. *Sustainability, 10*, 4033–4052.

Key Questions Reflecting Applicability in RealLife

1. To identify the impact of perceived usefulness of the hybrid electric vehicles on purchase decisions of customers.
2. To determine the impact of perceived ease of use of hybrid electric vehicles on the purchase decisions of customers.
3. To find out the impact of compatibility of hybrid electric vehicles on the purchase decisions of customers.
4. To reveal the impact of complexity of hybrid electric vehicles on the purchase decisions of customer.

Fakhrul Hasan is a Lecturer in Accounting and Financial Management at Northumbria University, UK. Prior to that, he worked at De Montfort University, Leicester, UK and University of Cumbria, UK. He obtained his PhD in Finance from Keele University in 2019. His main research interests include behavioral finance, dividend policy, capitalism, sustainability reporting, corporate governance, and stock markets. Some of his papers are published in ABS high ranking journals, including Technology Forecasting and Social Changes, Journal of Applied Accounting Research, Global Flexible System Management Journal and The Journal of Prediction Markets.

Gular Ibrahimova holds a 2022 master's degree in finance, Management, and Leadership from the University of York. Currently an Accounting Supervisor at FOH. Her expertise in financial management drives efficiency and accuracy in operations.

Mohammad Raijul Islam is an Associate Lecturer at the Manchester Metropolitan University. His primary research area covers- Business Innovation, Strategy, HRM, Financial Management, Entrepreneurship.