Manchester Metropolitan University

e-space

Manchester Metropolitan University's Research Repository

Please cite the Published Version

Ajiboye, Ayooluwa A, Popoola, Segun I, Adewuyi, Oludamilare Bode, Atayero, Aderemi A and Adebisi, Bamidele (2022) Data-driven optimal planning for hybrid renewable energy system management in smart campus: a case study. Sustainable Energy Technologies and Assessments, 52 (B). p. 102189. ISSN 2213-1388

DOI: https://doi.org/10.1016/j.seta.2022.102189

Publisher: Elsevier

Version: Accepted Version

Downloaded from: https://e-space.mmu.ac.uk/631617/

Usage rights: BY-NC-ND Creative Commons: Attribution-Noncommercial-No Derivative Works 4.0

Additional Information: This is an Accepted Manuscript of an article which appeared in final form in Sustainable Energy Technologies and Assessments, published by Elsevier

Enquiries:
If you have questions about this document, contact openresearch@mmu.ac.uk. Please include the URL of the record in e-space. If you believe that your, or a third party's rights have been compromised through this document please see our Take Down policy (available from https://www.mmu.ac.uk/library/using-the-library/policies-and-guidelines)

Data-driven optimal planning for hybrid renewable energy system management in smart campus: a case study

Ayooluwa A. Ajiboye[a], Segun I. Popoola[a,b], Oludamilare Bode Adewuyi[c,*], Aderemi A. Atayero[a], Bamidele Adebisi[b]

[a] *Department of Electrical and Information Engineering, Covenant University, Ota, P.M.B 1023, Nigeria*
[b] *Department of Engineering, Manchester Metropolitan University, Manchester, United Kingdom*
[c] *Department of Electrical and Electronic Engineering, First Technical University, Ibadan, 200255, Nigeria*

Abstract

Academic and research institutions need to be at the forefront of research and development efforts on sustainable energy transition towards achieving the 2030 Sustainable Development Goal 7. Thus, the most economically feasible hybrid renewable energy system (HRES) option for meeting the energy demands of Covenant University was investigated in this study. Several optimal combinations of energy resource components and storage which have significant potentials within the university campus were modeled on HOMER software in grid-connected mode. The daily energy consumption data of Covenant University were measured using EDMI Mk10E digital energy meter for a whole year. Data for analyzing renewable energy potentials for several years were sourced from the NASA database through the HOMER platform. Significantly, due to the fluctuating price of diesel fuel in Nigeria, sensitivity analysis was carried out for each combination using diesel fuel prices ranging from 0.3 $/litre to 1 $/litre. The results of each projected combination which gave 32 simulation scenarios, were analyzed comparatively using eight important system performance indices which cover economic, technical, and environmental impact assessment with and without battery energy systems. The results of the comparative analysis showed that the PV-Diesel-Grid-BESS HRES is the best configuration for meeting the Covenant university load demands in terms of credible reduction in the net present cost and cost of electricity. However, deployment of the wind energy system is economically infeasible at the study site, while the diesel generator should be strictly a backup.

Keywords: sustainable development goals, hybrid renewable energy system; energy sustainability; smart energy resource management; fuel price sensitivities; carbon emission reduction

*Corresponding author
Email address: adewuyiobode@gmail.com (Oludamilare Bode Adewuyi)

Nomenclature

η^B	Charge Efficiency of the Battery Bank.
η^{inv}	Inverter Efficiency.
η^P	Solar Panel Efficiency.
σ	Self-discharge Rate of the Battery Bank.
A	Shear coefficient, ranging from 0.10 to 0.40.
a	Generator fuel curve intercept coefficient (1/kWh), about 0.00626 [13].
A^P	Surface Area of the PV module (in m^2).
b	Generator curve slope (1/kWh), about 0.2831 [23].
C^{A_F}	Diesel Generator Annual Fuel Cost.
C^f	Cost per litre.
D^f	Hourly Fuel Consumption of diesel generator.
e_o	Elementary charge = 1.0621×10^{-19} A.s.
G^R	Solar Irradiance (kW/m^2).
h	Hub height.
h_r	Reference height.
I	Output Current of the PV cell.
I_o	Saturation current of the diode.
I_{ph}	Source Current (photo current).
J^{D_M}	Energy demand from the hybrid system at hour h, kWh.
J^{G_P}	Anneal energy generated by PV array (in kWh).
J^{G_W}	Annual Energy generated from the wind turbine.
$J^{G_B}(h)$	Energy Generated by the Battery Bank at hour h, kWh.
$J^{G_B}(h-1)$	Energy generated by the battery bank at hour (h – 1), kWh.
$J^G(h)$	Energy generated from the renewable energy system at hour h, kWh.
k	Boltzmann constant 1.3806×10^{-23} A.s.
P^{out}	Generator Power Output (kW).
P^P	Power Generated by the PV system.
P^{rated}	Generated rated capacity (kW).
P^R	Rated power of the wind turbine.
P^W	Total power generated by the wind energy conversion systems.
T	Temperature (K).
U	Cell Voltage.
V_{ci}	Cut-in wind speed of the wind turbine.
V_{co}	Cut-out wind speed of the wind turbine.
V_r	Rated Wind speed of the wind turbine.
V_w	Wind speed of the wind turbine at hub height.
$x\ hrs/day$	Average sunshine hours per day at the case study site.
AVG	Average.
HRES	hybrid renewable energy system.
I_d	Diode current.
I_{Rsh}	current along the shunt resistance.
MAX VAL.	Maximum energy consumption of the month.
MIN VAL.	Minimum Energy Consumption of the month.
R_{sh}	Shunt resistance.
R_s	Series output resistance.
S. DEV.	Standard Deviation.

1. Introduction

Deployment of renewable energy resources (RERs) is identified as a credible solution to the ongoing world energy crisis. The use of RERs comes with additional advantages such as pollution reduction, energy supply reliability, and environmental sustainability. As a result, the developing field of renewable energy, especially hybrid renewable energy systems, is the direction in which the world is heading for alternative and better means of meeting the rapidly growing world energy demand. The application of hybrid renewable energy systems (HRES) for energy generation is gradually replacing conventional means of generating energy which is majorly fossil fuels-based; this lays the ground for more extensive research undertaken by energy institutions, universities, and laboratories in several countries. The most recent trends in renewable energy research activities are focused on achieving better HRES designs,

more efficient optimization techniques for power flow and energy management, and effective economic deployment of the designed systems for power generation. The appeal of HRES comes in its unique and extensive applications in areas such as rural (off-grid systems), distributed power generation, micro-grid systems, smart grid technologies, and on-grid electricity generation for socio-economic growth and development [1, 2]. The fact that HRES techniques are dependent on ubiquitous, unlimited resources and are environment-friendly makes hybridization of two or more renewable energy technologies with backup supply reserves to be the eminent solution to the world's energy supply problems, especially under adverse environmental conditions [3, 4].

According to the International Energy Agency (IEA), in 2013, the world's total primary energy supply (TPES) was 1.575 x 10^{17} Watt-hours or 18 Terawatt-years [5]; of which only about 69% was consumed [6]. The wasted energy is attributed to the inefficiency of the processes required in refining and transporting the energy, especially when generated by conventional methods such as fossil fuels. Furthermore, fossil fuels as of 2016, generated about 80% of the world energy supply [7] which shows the world's current dependence on these rapidly depleting resources. Hence, there is a need for a paradigm shift to alternative, more sustainable, reliable, and environmental-friendly sources of energy to be backed up with efficient energy resource conservation and management practices. Renewable energy systems application experienced massive growth from 2000 through 2012; this is attributed to the pressing demand for the decrease in the usage of other sources of energy such as nuclear due to nuclear disasters and the environmental concerns surrounding the fossil-based energy sources [8, 9].

Renewable energy technologies include a wide range of energy resources from solar (photovoltaic systems and concentrated solar power) to wind power, hydro, biomass, geothermal, oceanic waves, and tides. Renewable energy used as a standalone power supply system has a low-efficiency rate, and this is due to the poor conversion efficiency from the energy resource to electrical energy. An example of this is the solar PV systems that use photovoltaic (PV) panels with a conversion efficiency of about 20%. Furthermore, most of the renewable energy technology resources though inexhaustible, occur intermittently and unpredictably. This situation implies that there is no constant supply of energy, and this leads to overall poor system performance when applied as standalone technologies [10]. Thus, most energy system design ensures planned coupling of renewable energy technologies with the already existing conventional energy supply and energy storage facilities as a backup for periods of insufficient and unreliable supply from the RERs technologies [11]. This approach solves the numerous problems

associated with standalone renewable energy system configuration such as supply unreliability, poor power quality, high cost of/insufficient energy storage *etc.*.

1.1. Review of relevant works

Several research works have been carried out on HRES over the years in different parts of the world towards improving the quality and reliability of output from renewable energy resources-based supply systems [12]. In recent times, several research works are going on towards achieving energy autonomy and sustainability for on-campus energy users. Many of these efforts are directed towards encouraging energy resource management and conservation practices and achieving environmental sustainability right from the academic and research centers [13, 14, 15, 16]. In [17], HRES that consisted of PV systems, wind turbines, and biogas generators were optimally planned for rural electrification in the Fars province of Iran. The design goal is to optimally combine available under-utilized energy resources within the region to achieve a sufficient off-grid energy supply system towards reducing the contributions of fossil fuel power plants and CO_2 emissions. The HOMER Pro software was deployed for the optimization procedure, and the sensitivity analyses considered are the effects of the optimal system configurations on input biomass rate, biomass price, and inflation rate parameters which are directly related to the cost of electricity (COE).

In [18], the techno-economic feasibility of an autonomous HRES for energy supply for an academic community in the East District of Sikkim of India is reported. The HOMER Pro Microgrid Tool was extensively deployed for optimization and system viability assessment using hourly data input considering 31 possible combinations of the available energy resources such as solar energy, wind energy, biogas, syngas, and hydrokinetic energy with batteries as a backup. The economic parameters analyzed are the net present cost, the Levelized cost of energy, the cost of battery storage, amount and effect of emissions, area requirements, and employment prospects. In [19], a data-focused novel Mixed Integer Linear Programming (MILP) optimization algorithm was developed as a resource assessment tool for the optimal sizing of HRES for a real case study of a mountain hut located in South-Tyrol (Italy); the considered energy resources are solar, wind and diesel generators combined with battery storage. Based on optimal configurations of the available resources, several scenarios were considered by the algorithm, with each scenario marked by different costs and energy deficits indices for objective comparison. In [20], a PV/Diesel/Pump-hydro HRES is designed and compared with a battery-based HRES system for cost-effectiveness and sustainability using the genetic algorithm technique and HOMER software. The

authors In [21] present a recently derived approach of integrated demand-supply management (DSM) using particle swarm optimization for the optimal design of an off-grid HRES consisting of solar PV, diesel generators, battery system for the electrification of residential buildings in an arid environment. A multi-agent system concept in Matlab was initially used to optimize by minimizing the total net present cost (TNPC), considering the reliability of supply and renewable energy penetration level as constraints. Further techno-economic analyses based on sensitivity studies are carried for validation using the HOMER software.

The viability of the optimal design of HRES considering sizing and choice of components towards achieving a cost-effective power supply solution in a remote rural settlement using Genetic Algorithm (GA) and HOMER Pro Software is discussed in [22]. The main objective of the paper is to minimize the total net present cost (TNPC), Cost of Energy (COE), Load loss, and CO_2 emissions. Four different HRES combinations are considered using the sensitivity analysis subject to changes in annual wind speed and biomass fuel prices. The authors in reference [23] researched the optimization analysis of a stand-alone hybrid energy system for powering the senate building of the University of Ilorin, Nigeria. They investigated the feasibility of using a PV-Wind-Diesel-Battery HRES design as an alternative source of generating electric power to supply the demand of the senate building. In reference [24], the authors researched the modeling and control of a hybrid photovoltaic wind power system. The photovoltaic wind power system model included a battery as energy storage, an inverter, and the load. The authors carried out the power control of the proposed hybrid power system using the LabView Software, and they experimentally implemented the proposed control strategy using the MATLAB/Simulink package.

The authors in reference [25] explored the application of HRES in water management in conjunction with the electrical energy output of the designed system in the Fournoi Island in the Aegean sea. In the research work, the authors modeled an HRES to utilize the water resources present in Fournoi for electrical power generation, that is, through hydropower as well as using the same system to meet both the agricultural and the drinking water demand by employing a desalination plant. The proposed HRES comprised of the combination of a small hydroelectric power station, four wind turbines, a pumping station, two water reservoirs, and a desalination plant. Reference [26] presented a study report on the thermo-economic simulation model of a hybrid renewable power plant. The model employed both photovoltaic, wind turbine technologies in conjunction with a storage facility. The total hybrid power

plant capacity was 200 kW (that is, 10kW for the WTG and 190 kW for the photovoltaic technology), and the energy storage capacity was 400 kWh. The study aimed to design an HRES power plant characterized by minimal fluctuations and marginal quantities of electrical energy purchased from and sold back to the grid towards maximizing the self-consumption of electricity. The thermo-economic model was formulated in the TRNSYS environment that enables the user to determine the best system configuration to be used in the HRES design as well as maximize the economic profitability through the consideration of time-dependent tariffs in application to the amount of electricity exchanged with the power network/grid and storage possibilities.

The Distributed Energy Resources Customer Adoption Model (DER-CAM) is adopted to determine the optimal size and type of distributed energy resources (DERs), as well as the suitable operating schedules for a sample utility distribution system in the paper [27]. The evaluation of the technical and economic benefits of the selected DER sizes and operating schedules are performed in the DER-CAM. The results show that the techno-economic analyses of hybrid renewable energy systems are essential for the efficient utilization of renewable energy resources for microgrid applications. In a study conducted as reported in [28], a Fuzzy Multi-criteria Decision-making (FMCDM) approach was deployed to enhance the site selection procedure for the most effective wind-powered hydrogen refueling station. Parameters such as technical, economic, environmental, geographical, and social aspects were considered for prioritizing the eight cities of Iran used as the case studies. The FMCDM approach was coupled with FTOPSIS and FVIKOR for the efficient prioritization of different alternatives in the case of many conflicting criteria. In [29], the technical and economic benefits of three grid-independent hybrid renewable-based co-generation systems for electricity and heat production were investigated extensively using a small-scale load on HOMER Pro software. The techno-economic-environmental and reliability analysis was carried out considering 20 years value of discount and inflation rates as a benchmark case. The result suggests that the standalone solar/wind/electrolyzer/hydrogen-based fuel cell, integrated with a hydrogen-based boiler system, is the best alternative.

The study reported in [30] considered the techno-economic feasibility of an off-grid integrated solar/wind/hydrokinetic plant to co-generate electricity and hydrogen for a remote micro-community using HOMER (hybrid optimization of multiple energy resources). Alongside the techno-economic feasibility analysis, sensitivity analysis was conducted to ascertain the impact of 10% fluctuations in wind speed, solar radiation, temperature, and water velocity on the annual electricity production,

unmet electricity load, Levelized cost of electricity (LCOE), and the net present cost (NPC) using a remote village with 15 households as the case study. From the technical analysis, it indicated that the PV system with a rated capacity of 40 kW accounts for 43.7% of total electricity generation, while the wind turbine and the hydrokinetic turbine with nominal capacities of 10 kW and 20 kW accounted for 23.6% and 32.6%, of the total electricity produced, respectively. The study in [31] determined the optimal size of a Photovoltaic (PV)/wind/biomass hybrid system with and without energy storage to improve the demand-supply fraction (DSF) and the renewable energy fraction. The net present value is constrained to be larger than or equal to zero. The Generalized Reduced Gradient algorithm was utilized in the study to evaluate the optimal components' capacities of the proposed system. The Middle East Technical University Northern Cyprus Campus was deployed as the case study. The simulation results showed that the proposed system can be effectively designed to achieve the target goals with components sizes of 1.79 MW PV, 2 MW wind and 0.92 MW biomass systems supported with a 24.39 MWh pumped hydro storage system and 148.64 kWh batteries. With this arrangement, the hybrid energy system achieved a renewable energy fraction of 99.59%, a demand-supply fraction of 98.86%, and the unit cost of electricity equals 0.1626 $/kWh.

In the study reported in [32], a regional renewable energy assessment approach is presented considering the mismatch of supply and demand for a hybrid energy supply system with Photovoltaic (PV) and wind turbine systems. In the study, renewable resources mapping is incorporated towards optimizing the capacities for different configurations of PV and wind systems for selected real sites as test cases by optimizing system size while maximizing the renewable energy fraction in the regional power generation mix and reducing the total energy costs using MATLAB's Pareto Search algorithm. The results obtained from the simulation point out the benefits of resource mapping based on energy-demand matching as compared to quantitative assessment of the considered sites. In this work, the design analysis of an optimal hybrid renewable energy system for meeting the energy demand of the Covenant University campus was investigated under different scenarios. This study involves analyzing the technical and economic effects of combining the available energy resources within the university campus towards meeting the total load demand reliably. The available energy supply resources within the university campus include solar energy resources, wind energy resources, diesel or petrol Genset (as conventional backup), storage facility, and on-grid energy supply. This design process was actualized using the HOMER software with the following specific objectives:

- The output characteristics of each energy component in the model are determined and the effective output of the combinations of the different energy systems with and without BESS are observed for the projected possible thirty-two scenarios using HOMER Pro Software to see which combination is techno-economically efficient for meeting the load demand of Covenant University.

- Essentially, the most available literature does not consider diesel cost sensitivity analysis, and the need to observe the effect of diesel cost sensitivity is becoming crucial due to the continuous fluctuations in the price of diesel. In this work, the diesel generator is strictly considered as a backup option after all other energy sources and grid.

To meet the 2030 Sustainable Development Goals, SDG target 7, which centers on achieving reliable, clean, and affordable energy for all, there is an urgent need for research and development efforts towards a sustainable and innovative energy transition at all levels of national development. Hence, this research work is carried out in alignment with sustainable energy, sustainable cities and communities, and climate action goals of the United Nations' 2030 Sustainable Development Goals. In the specific, the goal of this study is to investigate an adaptable template for carrying out data-dependent analysis on the design of hybrid renewable energy system for essential infrastructures using the Covenant University campus as a case study. The remaining parts of this report are thus arranged: Section 2 gives a detailed description of the case study and the available energy resources with their potentials, the simulation model for the proposed hybrid renewable energy system and the simulation parameters are discussed in section 3, the results of the simulation on HOMER and the discussion of the technical and economic implications of the different configurations considered are presented in section 4, and the report was concluded with key notables in section 5.

2. Case study description and available energy resources characterization

Covenant University is a world class university located at KM 10, Idiroko Road, Ota, Ogun State with a latitude of 6° 40.3' N and a longitude of 3° 9.5' E. The daily energy consumption data of Covenant University for the year 2019 was used in the analysis and design of the HRES. The extensive data set of the total energy consumption of Covenant University used in this design was measured and collected on a daily interval for the twelve months of the year 2019 as presented in reference [33]. The authors used the EDMI Mk10E digital energy meter, as shown in figure 1, for measuring and collecting

the energy consumption data of the school from the distribution substation providing electricity to the campus community.

Figure 1: EDMI Mk10E Digital Energy Meter.

2.1. Load profile of Covenant University

For a more accurate analysis of the energy consumption of Covenant University in 2019, the hourly energy consumption of the university is considered and analyzed to determine the hourly load profile of the university. The trend for the monthly energy consumption for the year on an average hourly basis is shown in figure 2.

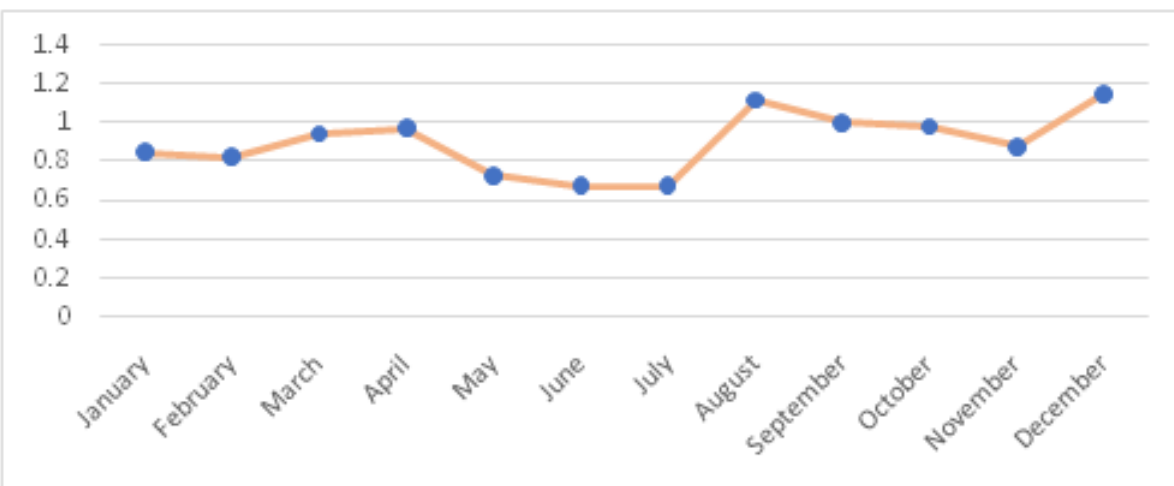

Figure 2: Monthly Average Hourly Energy Consumption for 2019 (MWh).

The first semester of the school session is from August to December with the school running at maximum capacity due to maximum student presence on campus. In the second semester from January

to April, the energy consumption is less due to lighter student presence on campus. The university activities are suspended during the three-month vacation period from May to July causing the energy consumption of the university to be minimal during that period with only administrative buildings and staff housing being powered.

2.2. Renewable resources potential: solar irradiance and wind speed

The solar, wind and temperature resource data for covenant university are obtained from NASA (National Aeronautics and Space Administration) surface meteorology and solar energy platform using the HOMER software data platform. The global horizontal radiation and air temperature data are monthly averaged over a 22-year period (July 1983 - June 2005). The wind speed data are obtained at 50m height above the earth surface for open terrain and are monthly averaged over a 10-year period (July 1983 - June 1993).The monthly wind speeds and solar irradiance available at Covenant University are given in Table 1 below.

Table 1: The Monthly Average Wind Speeds and Available at Covenant University.

Month	**Average Wind Speed** (m/s)	**Average Solar Irradiance** (kW/m^2)
January	4.15	0.23
February	4.30	0.24
March	4.01	0.23
April	3.49	0.21
May	3.00	0.19
June	3.12	0.16
July	3.70	0.16
August	3.87	0.16
September	3.50	0.17
October	2.83	0.19
November	3.05	0.21
December	3.65	0.23

According to Table 1, the highest wind speed available at Covenant University is in January at 4.15m/s and lowest in October with a speed of 2.83 m/s. The highest solar irradiance is observed during the harmattan period from November to February with the peak value of 0.24 kW/m^2 in February and the lowest solar irradiance occurred from June to August at 0.16 kW/m^2.

3. Proposed hybrid renewable energy system model

figure 3 below shows the proposed design showing the available energy supply options from which different combinations was investigated for the optimal HRES design for Covenant University. The

design comprises of two renewable sources (solar PV and wind), a diesel generator set, a battery energy storage facility and the supply mains from the utility grid.

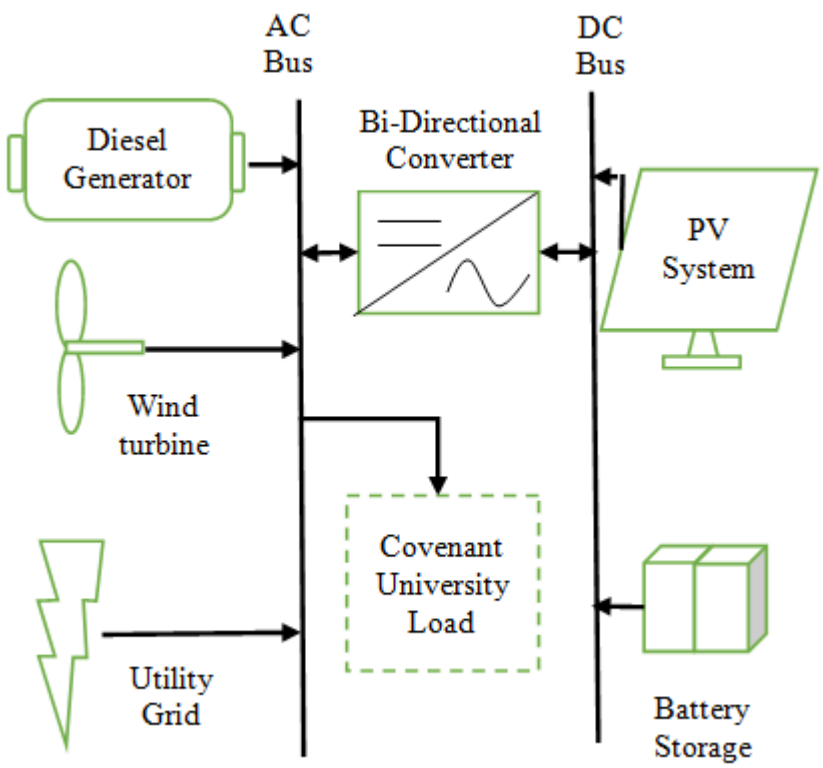

Figure 3: Proposed Schematic of the HRES configuration.

3.1. System component modeling for HOMER HRES design

The Hybrid Optimization of Multiple Electric Renewables HOMER Pro is a software designed by the National Renewable Energy Laboratory (NREL), United States of America. HOMER has become the yardstick for the analysis, evaluation and optimization for different technical and financial options for microgrid designs [34]. Basically, HOMER Pro provides the platform to evaluate the many possible configurations of renewable energy systems for easier decision making for the system designer. It contains a robust library of both conventional and renewable energy system components for both isolated and grid-connected configurations. Hence, an accurate and precise modelling of the constituents of the HRES design provides the tools for the identification and evaluation of the performance of the individual components and the optimal designing of the HRES [35]. The mathematically modelling of the design components of the proposed hybrid renewable energy system in HOMER are given below.

3.1.1. Solar photovoltaic (PV) system

Photovoltaic (PV) cells are made of semiconductor material that serves as the building blocks of the solar PV module [36]. The equivalent circuit of the photovoltaic cells is given by a current source, diode and resistors in series and parallel (shunt) connection as shown in figure 4 below [37]:

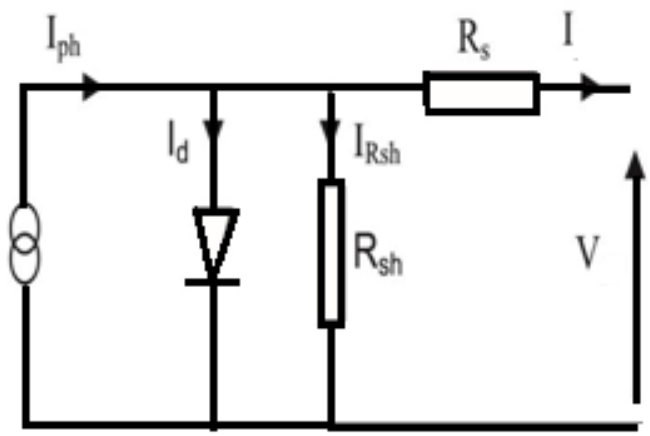

Figure 4: Equivalent circuit of a photovoltaic cell.

The generated current by the current source is a function of both the thermal and the photo energy from the incident sun rays. The output power of a PV module is given in equation (1) below [38, 39]:

$$P^P = G^R \times A^P \times \eta^P \tag{1}$$

Hence, the annual energy generated by the solar PV system is given by:

$$J^{G_p} = P^P \times x \ \ \text{hrs/day} \times 365 \ \ \text{day} \quad (\text{kWh}) \tag{2}$$

The output current is calculated as given by equation (3) below:

$$I = I_{ph} - I_o \left(e^{\frac{eo \times U}{kT}} - 1 \right) \tag{3}$$

The voltage, V is determined from the equation (4) given below:

$$V = \frac{k}{eo} \times T \times ln \left(1 - \frac{I - I_{ph}}{I_o} \right) \tag{4}$$

The Specifications of the Photovoltaic module used in this design are given in Table 2 below:

Table 2: Specifications of Photovoltaic Module

Name	**Schneider ConextCore XC [680kW]**
Manufacturer	Schneider Electric
Panel Type	Flat Plate
Rated Capacity (kw)	680.08
Temperature Coefficient	-0.41
Operating Temperature (^{o}C)	45
Efficiency (%)	17.3
Time (years)	25
Capital ($)	3,000
Replacement ($)	3,000
O&M Cost ($/year)	10
Electrical Bus	DC
Derating Factor	96
Capacity Optimization	Search Space; 680.08kW
Temperature Effects on power (% per ^{o}C)	-0.41
Nominal Operating Cell Temperature (^{o}C)	45
Efficiency at standard test conditions (%)	17.3

The temperature effects are considered, and the maximum power point tracker was not explicitly modeled in the PV system design. The PV derating factor is a scaling factor that HOMER applies to the PV array power output to account for reduced output in the real operating conditions compared to the conditions under which the PV panel was rated. The PV model used in this work is a generic PV system with Schneider Electric's Grid-following central inverter.

3.1.2. Wind generating system

The hourly output power for the wind turbine energy system is mathematically expressed in equation (5) below [40, 41]:

$$P^W = \begin{cases} 0; & V_w < V_{ci} \text{ or } V_w \leq V_{co} \\ P^R \times \frac{V_w^3 - V_{ci}^3}{V_w^3 - V_{co}^3} & V_{cin} \leq w \leq V_r \\ P^R; & V_r \leq V_w \leq V_{co} \end{cases} \tag{5}$$

The wind speed of the wind turbines can be determined using the power law equation at the specified hub height with respect to the reference height. This is expressed in equation (6) as given below [42, 43]:

$$V_w = V_r \left(\frac{h}{h_r} \right)^{\alpha} \tag{6}$$

Where α = Shear Coefficient ranging from 0.10 to 0.40 for different terrain [44, 45]. The annual energy

generated from the wind turbine generators is mathematically given below in equation (7) [46]:

$$J^{G_W} = P^W \times 8760 \text{ (h/yr)} \tag{7}$$

The wind turbine used in the HRES design is a 900kW Enercon wind turbine and the specifications of the wind turbine are given in Table 3 below.

Table 3: Specification of the Wind Turbine

Name	**Enercon E-44 [900kW]**
Rated Capacity (kW)	900
Manufacturer	Enercon
Capital Cost ($)	2,470,275.61
Replacement Cost ($)	2,470,275.61
O&M Cost ($/year)	199,737
Quantity (Search Space)	1
Lifetime (years)	25
Hub Height (m)	55
Generator type	Synchronous
Number of generators	1
Grid Frequency (Hz)	50
Voltage (V)	690.0V
Grid Connection	IGBT (as in IGBT inverters)
Rotor Diameter (m)	44
Tower Type	Steel Tube
Tower Shape	Conical
Corrosion Protection	Painted
Electrical Bus	AC
Cut-Out Wind speed	28-34 m/s with ENERCON storm control
Quantity Optimization	HOMER Optimizer

The wind turbine is gear-less, variable speed, and single blade adjustment with hub height options of either 45m or 55m.

3.1.3. Diesel generator set

The mathematical modelling of the diesel genset is expressed in terms of the generated energy by the diesel genset at a specified time t, represented by $J_t^{G_D}$ as given by equation (8) below [47]:

$$J_t^{G_D} = J_t^{D_M} - \left[J_t^{G_P} + J_t^{G_W} + J_t^{G_B} \right] \tag{8}$$

The annual fuel cost of the diesel generator set is denoted by C^{A_F} which depends on two other important parameters; the cost per litre (C^f) and the amount of fuel consumed (D^f), as expressed in

equation (9) given below [48]:

$$C^{A_F} = \sum_{t=1}^{T} \left[C_t^f \times D_t^f \right] \tag{9}$$

The hourly fuel consumption, D^f of the diesel generator set is based on the load characteristics of the generator; this is mathematically expressed in equation (10) below [49]:

$$D^f = ap^{rated} + bp^{out} \tag{10}$$

The diesel generator set utilized in the modelling of the HRES design and simulation is a Caterpillar Inc. 3500kVA 50Hz generator set. The generator used is modeled to supply 1.2 times the peak load, which is about 2.4 MW considering the 2.0 MW peak load of covenant university. The specifications of the generator set are as given in Table 4 below.

Table 4: Specifications of the Diesel generator set

Name	**CAT-3500kVA-50Hz-PP**
Capacity (kW)	2800
RPM	1500
Fuel	Diesel
Fuel Curve Intercept (L/hr)	63.2
Fuel Curve Slope (L/hr/kW)	0.229
Electrical Bus	AC
Minimum Load Ratio (%)	25
Heat Recovery Ratio (%)	0.00
Lifetime (Hours)	90,000.00
Minimum Runtime (minutes)	0.00
Operating Mode	Optimized across 24 hours of the day
Operating Time period	All Week
CO Emissions (g/L fuel)	0.38
Unburned HC (g/L fuel)	0.15
Particulates (g/L fuel)	0.03
Fuel Sulfur to PM (%)	0
NOx (g/L fuel)	23.15
Lower heating value (MJ/kg)	43.2
Density (kg/m3)	820
Carbon Content (%)	88
Sulfur Content (%)	0.4

The diesel fuel pricing used in the simulations was 234 naira per liter which translates to 0.65 $/liter at an exchange rate of 1 $ to N364. To account for the fluctuations in the diesel prices in Nigeria, sensitivities of the fuel prices were also used in the simulation from 0.3 $/liter to 1.0 $/liter

with a step size of 0.1 $/liter to show the effect of the different fuel prices on the cost of running the HRES incorporating a diesel genset. The initial cost or capital cost of the CAT-3500kVA-50Hz-PP Diesel generator set used in the modelling and simulation of this project is unavailable from the manufacturer. Hence, in this simulation, the capital cost and replacement cost are set as $ 0.00 due to unavailability of the capital cost pricing. Hence, only the net present cost, running and operation cost of the generator can be determined using the combustion, energy output and diesel fuel price of the generator.

3.1.4. Battery energy storage system

The state of charge of the battery bank depends on the energy balance relationship between the total energy demand and the total available generated energy of the hybrid renewable energy system as explained in [50, 51]. If the renewable energy resources used in the HRES design generate more energy than the required energy or load demand, the excess electrical energy is going to be stored in battery banks for future application/utilization towards meeting the required energy demand when the RE energy systems cannot meet the load demand. The available capacity of the battery bank at hour h during charging can be expressed according to equation (11):

$$J^{G_B}(h) = (1-\sigma) \times J^{G_B}(h-1) + \left[J^{G}(h) - \frac{J^{D_M}(h)}{\eta^{ivn}} \right] \times \eta^{B} \tag{11}$$

Conversely, when the total generated energy by the renewable sources is unable to meet the required energy demand, the battery bank discharges and supplies its stored energy to make up for the energy deficit. The available capacity of the battery bank within the safe limit at a given hour h during discharging is expressed in equation (12):

$$J^{G_B}(h) = (1-\sigma) \times J^{G_B}(h-1) + \left[\frac{J^{D_M}(h)}{\eta^{ivn}} - J^{G}(h) \right] / \eta^{B} \tag{12}$$

The battery storage used in the HRES simulations is a generic zinc bromide flow battery which has a $100/kWh cell stack replacement cost every ten years. Its detailed specifications are given in Table 5 below.

3.1.5. Utility grid infrastructure

The tariff from the utility supplying the study site (Covenant university) based on the 2019 energy consumption is 38.67 naira/kWh, which is equivalent to 0.11 $/kWh using an exchange rate of 1$ to

Table 5: Specifications of the battery energy storage system

Name	**Generic 1kWh Zinc Bromide Battery**
Nominal Voltage (V)	600
Nominal Capacity (kWh)	1000
Max Discharge Power (kW)	3000
Nominal Capacity (Ah)	1670
Roundtrip Efficiency (%)	90
Maximum Charge Current (A)	1670
Maximum Discharge Current (A)	5000
Time (years)	30
Capital ($)	400
Replacement ($)	400
O&M ($/year)	10
String Size	1
Initial State of charge (%)	100
Minimum State of charge (%)	20
Maintenance Procedure	Replacement Cell Stack
Maintenance Interval (hrs)	87600
Marginal Cost ($)	100

364 Naira. Here, the HRES is not designed to sell back to the griddue to regulation issues in selling back to the grid in the practical sense. Hence, the sell-back rate is set as 0.00 $/kWh for the HRES design considered in this work. The net purchases are calculated monthly in the HRES simulations and the specifications of the utility grid supplying Covenant University is given as 0.110$/kWh. The site-based generation capacity of Canaan land, which houses the university, is a combination of a 5.67 MW gas turbine and a 6 MW gas-fired engine; hence, total capacity is 11.67 MW or 11,670 kW. The purchase capacity of the grid for the HRES is designed for 40% of the generation capacity of 11,670 kW which is 4.668 MW. To account for reserve and any fluctuations, the purchase capacity is set at 5MW, i.e. maximum amount of power the HRES can buy from the grid is set at 5 MW (5000 kW). The grid reliability interconnected, and standby charges are set at $0.00 and the grid is scheduled for 24 hours a day and all week operation. The grid emission parameters are set as 632.00g/kWh carbon dioxide, 0.00g/kWh carbon monoxide, 0.00g/kWh unburned hydrocarbons, 0.00g/kWh particulate matter, 2.74g/kWh sulfur dioxide and 1.34g/kWh nitrogen oxides.

3.1.6. Energy converter

The ABB power store converter brand, which is available for indoor and outdoor installations, is deployed in this work. Its size ranges from 90kVA to 2880 kVA continuous rated output and has a 200 % overload capability. It is fully scalable and modular for multiple MW installations and can

be connected to both the low voltage and medium voltage networks via transformers. The selected brand in this study come with an automation system that can provide microgrid functionality which includes interfacing with solar, diesel/gas generators as well as grid connection and sky cameras.The specifications of the converter system used in this design is given in Table 6 below:

Table 6: Specification of the converter system

Name	**ABB PSTORE-PCS**
Rated capacity (kW)	2880
Lifetime (years)	25.00
Efficiency (%)	96.00
Relative Capacity (%)	100
Configuration	Paralleled with AC generator

ABB provides an extensive range of power converters and inverters to be utilized in a very wide range of applications across several industries, and this determined the capital cost. In the HOMER simulations, the capital cost, replacement cost and OM costs are hence set as $ 0.0 and only the net present cost, running and operational cost of the converter are considered in the simulations.

3.2. Detail simulation procedures on HOMER

To carry out the simulation on HOMER, required information is selected and entered in the software under the Design Tab. The schematic of the simulated configurations of the HRES components on the HOMER platform is given in figure 5. The energy system was designed for a project lifetime of 25 years using an inflation rate of 11.37% and a discount rate of 14.0%.

The time step random variability of the hourly energy consumption data, as required by the simulation software, is expressed as a percentage ratio of the average hourly standard deviation and the average hourly mean. The day-to-day variability is determined to be 22.5358% while the time step random variability was determined to be 0.73827%. To determine the billing and cost of energy of the university's supply, a more recent dataset for the monthly energy consumption and energy billing of the university was collected for the year 2018 [52]. The microgrid controller set up used is the load following strategy in HOMER with the maximum possible lifetime of 25 years. Diesel-off operation is allowed and all the generators can operate, simultaneously, at generating capacity less than the peak load. The load following strategy is a dispatch strategy whereby whenever a generator operates, it only produces enough power to meet the primary load. The lower-priority objectives such as charging the storage bank or serving the deferrable loads are left to the renewable power sources. The load mod-

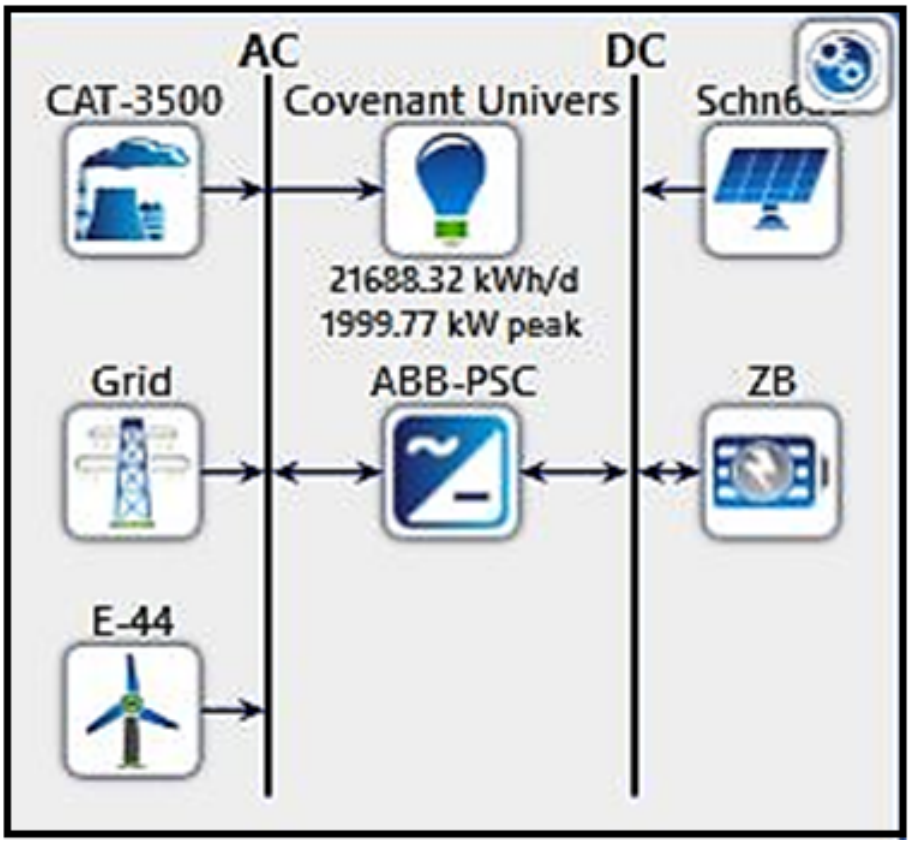

Figure 5: Schematic of the HRES configuration as designed on HOMER

eling parameters are as given in Table 7. The Optimizer settings for the simulation included 10,000 maximum simulations per optimization, a 0.0100 system design precision, a 0.0100 net present cost (NPC) precision and a 50.00 focus factor.

The detailed step-by-step methodological procedures used in carrying out this research are illustrated on the flowchart shown in figure 6. The simulation procedure was carried out for 32 possible grid-connected HRES configurations that are based on different design parameters such as the wind turbine hub height, diesel fuel prices, diesel fuel sensitivities, energy storage availability etc. Detailed analysis was then carried out on each of the 32 designed configurations using eight HRES performance parameters, which are total net present cost (NPC), cost of energy (COE), operating cost, diesel genset production, grid purchases, battery bank energy output contribution, total electricity production and amount of CO_2 emissions. The best configurations under each of the analyzed design parameters for different performance sensitivities are then compared to determine the optimal HRES configuration to meet the energy demand of the study site.

Table 7: Load Modelling Parameters

Microgrid Controller	**Load Following Parameters**
Time Step size of energy consumption	60 minutes (one hour)
Day-to-Day Random Variability	22.5358%
Time Step Random Variability	0.73827%
Peak Month	December
Load Type	AC
Average kWh/Day (Baseline & Scaled)	21,688.32 kWh/Day
Average kW (Baseline & Scaled)	903.68 kW (for 24-hour supply)
Peak Load (Baseline & Scaled)	1999.77kW (about 2MW)
Load Factor (Average kW divided by Peak Load)	0.45
Scaled Annual Average (kWh/Day)	21,688.32
Operating Reserve	10% of peak load
Capacity Shortage	0%
Project Lifetime (years)	25
Minutes per Time step	60 minutes
Time steps per year	8,760
Maximum Renewable penetration	55% of load
Minimum battery autonomy	2 hours

4. Simulation results and discussions

The detailed simulation conditions, credible assumptions and results are presented in this section. The expected energy production capacity of the HRES is first analyzed considering the load demand profile of the study cite (Covenant University. More so, the 32 possible HRES configuration are simulated on HOMER and compared using suitable technical, economic and environmental impact indices.

4.1. Average electricity production (kW) and energy demand

Based on the hourly load profile of Covenant University, the results of the monthly average electric production that is necessary to meet the load demand of Covenant university by the HRES, as obtained from HOMER, are given in Table 8. From Table VIII, the average load demand based on the 2019 energy consumption dataset is 903.68kW.

From Table 8, the maximum electricity production required is obtained in August at 1211.57 kW which is the start of a new school session (first semester). The electricity demand balances out over the semester till the very end where there is a sudden drop in the demand as obtained in November at 840.23 kW, which coincides with the end of the semester. The electricity demand is relatively high in December due to the end of the year activities. The result of the yearly energy demand based on different load types for the simulations is presented in Table 9 below:

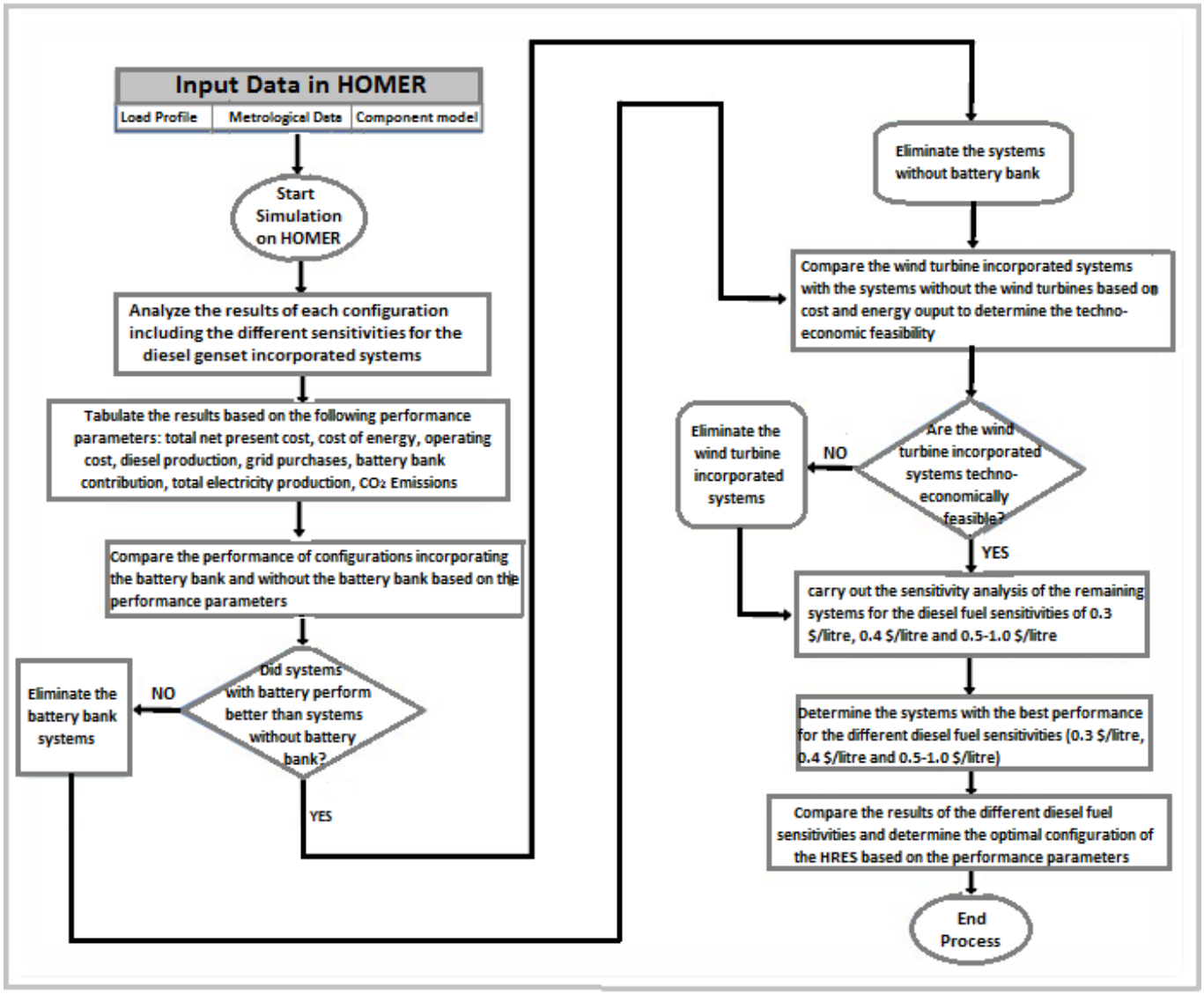

Figure 6: Flowchart for the Optimization Procedure to determine optimal HRES Configuration.

4.2. Renewable energy components output performances

The results of each of the possible HRES are done for different sensitivities of the diesel fuel price to account for the effects of the fluctuations in the diesel prices on the HRES. The energy outputs and the component performance for both the Schneider 680kW solar PV module and the Enercon E-44 wind turbine generator were the same for all the possible configurations for all the sensitivity values. Thus, the energy component performance parameters for the Schneider 680kW solar module and the Enercon E-44 wind turbine are presented in Table 10.

From the simulations, given the renewable resources available at Covenant University's geographical location, the Schneider ConextCore XC 680 kW Photovoltaic module produces an annual energy output

Table 8: Monthly Average Electric Production (kW)

Month	Electricity Production (kW)
January	838.87
February	782.41
March	970.13
April	979.89
May	694.78
June	684.56
July	672.4
August	1211.57
September	1015.23
October	1001.73
November	840.23
December	1137.59

Table 9: Annual Energy Demand type for Covenant University

Consumption	kWh/yr	%
AC Primary Load	7,916,237	100
DC Primary Load	0	0
Deferrable Load	0	0
Total	7,916,237	100

Table 10: Renewable Energy Components Performance

Quantity	Schneider ConextCore XC PV	Enercon E-44 WT
Rated Capacity (kW)	680	900
Mean Output (kW)	121	34.7
Mean Output (kWh/d)	2,909	304,195
Capacity Factor (%)	17.8	3.86
Total Production (kWh/yr)	1,061,908	1,061,908
Minimum Output (kW)	0	0
Maximum Output (kW)	691	833
Penetration (%)	13.4	3.84
Hours of Operation (hrs/yr)	4,318	6,910
Levelized Cost ($/kWh)	0.109	1.09

of 1,061,908 kWh/yr, a mean output of 121kW and a mean daily energy output of 2909 kWh/day operating for 4,318 hours/year. The Enercon E-44 wind turbine generator has a total annual electricity production of 1,061,908 kWh/yr with a mean power output of 34.7 kW operating for 6910 hours/year. The zinc bromide battery bank incorporates a string of 90 batteries with all the batteries in a parallel connection and a bus voltage of 600V. The expected life of the battery bank is 30 years, autonomy of 79.7 hours with a nominal capacity of 90,000 kWh with 72,000 kWh being usable. The energy output contribution of the Schneider 680kW photovoltaic module and the Enercon E-44 wind turbine generator is constant across all the possible configurations of the hybrid renewable energy systems proposed to

meet the energy demand of the Covenant University.

4.3. Battery-incorporated versus battery-excluded HRES

The results of each configuration for different sensitivities are presented below as grouped into several categories which collectively determine and define the performance of the system using different performance parameters as comparatively described in Table 11 below. There are thirty-two (32) models considered in total based on the sensitivities of the diesel prices for the diesel incorporated hybrid energy systems, and whether a battery bank was incorporated or not.

Table 11: Comprehensive Results of the HRES Designs

System	Total NPC	COE	Operating Cost	Diesel Production	Grid Purchases	BESS Output	Total Energy	CO_2 Emissions
Units	$	$/kWh	$	kWh/yr	kWh/yr	kWh/yr	kWh/yr	kg/yr
Grid only	16,300,810.00	0.11	870,786.10	-	7,916,237	-	7,916,237	5,003,062
Grid-BESS	16,225,550.00	0.1095	864,842.20	-	7,850,664	68,305	7,850,664	4,961,620
PV-Grid	16,373,010.00	0.1105	765,653.30	-	6,898,659	-	7,960,568	4,359,953
PV-Grid-BESS	16,294,300.00	0.11	759,525.90	-	6,831,417	70,044	7,893,326	4,359,953
Wind-Grid	21,883,710.00	0.1477	1,037,062.00	-	7,612,042	-	7,916,237	4,810,810
Wind-Grid-BESS	21,808,440.00	0.1472	1,031,118.00	-	7,546,469	68,305	7,850,664	4,810,810
PV-Wind-Grid	21,968,520.00	0.1482	932,603.00	-	6,600,593	-	7,966,696	4,171,575
PV-Wind-Grid-BESS	21,878,460.00	0.1476	925,868.80	-	6,527,835	75,789	7,893,938	4,125,592
Diesel-Grid : 0.3$/litre	13,392,940.00	0.09038	715,448.20	7,473,953	485,864	-	7,959,817	6,143,255
Diesel-Grid : 0.4 $/litre	16,282,060.00	0.1099	869,784.30	638,890	7,277,347	-	7,916,237	5,057,335
Diesel-Grid : 0.5 - 1$/litre	16,300,810.00	0.11	870,786.10	0	7,916,237	-	7,916,237	5,003,062
Diesel-Grid-BESS : 0.3 $/litre	13,320,900.00	0.08989	709,676.60	7,194,133	661,001	90,949	7,855,134	6,022,029
Diesel-Grid-BESS : 0.4 $/litre	16,206,800.00	0.1094	863,840.50	638,890	7,211,774	68,305	7,850,664	5,015,893
Diesel-Grid-BESS : 0.5 - 1$/litre	16,225,550.00	0.1095	864,842.20	0	7,850,664	68,305	7,850,664	4,961,620
PV-Diesel-Grid : 0.3 $/litre	14,139,160.00	0.09541	646,321.50	5,963,460	982,213	-	8,007,582	5,306,236
PV-Diesel-Grid : 0.4 $/litre	16,360,500.00	0.1104	764,985.10	437,944	6,460,716	-	7,960,568	4,397,278
PV-Diesel-Grid : 0.5 - 1$/litre	16,373,010.00	0.1105	765,653.30	0	6,898,659	-	7,960,567	4,359,953
PV-Diesel-Grid-BESS : 0.3 $/litre	14,045,770.00	0.09478	639,409.70	5,730,093	1,105,692	99,723	7,897,693	5,192,407
PV-Diesel-Grid-BESS : 0.4 $/litre	16,281,790.00	0.1099	758,857.70	437,944	6,393,473	70,044	7,893,326	4,354,780
PV-Diesel-Grid-BESS : 0.5 - 1 $/litre	16,294,300.00	0.11	759,525.90	0	6,831,417	70,044	7,893,326	4,317,456
Wind-Diesel-Grid : 0.3 $/litre	19,214,690.00	0.1297	894,483.00	6,973,714	684,318	-	7,962,226	5,893,716
Wind-Diesel-Grid : 0.4 $/litre	21,867,840.00	0.1476	1,036,214.00	516,966	7,095,076	-	7,916,237	4,854,481
Wind-Diesel-Grid : 0.5 - 1 $/litre	21,883,710.00	0.1477	1,037,062.00	0	7,612,042	-	7,916,237	4,810,810
Wind-Diesel-Grid-BESS : 0.3 $/litre	19,136,480.00	0.1291	888,381.90	6,706,723	844,816	93,989	7,855,734	5,774,531
Wind-Diesel-Grid-BESS : 0.4 $/litre	21,792,580.00	0.1471	1,030,270.00	516,966	7,029,503	68,305	7,850,664	4,813,039
Wind-Diesel-Grid-BESS : 0.5 - 1 $/litre	21,808,440.00	0.1472	1,031,118.00	0	7,546,469	68,305	7,850,664	4,769,368
PV-Wind-Diesel-Grid : 0.3 $/litre	19,915,370.00	0.1344	822,924.00	5,548,677	1,099,765	-	8,014,545	5,062,580
PV-Wind-Diesel-Grid : 0.4 $/litre	21,957,420.00	0.1482	932,010.20	375,687	6,224,906	-	7,966,696	4,203,464
PV-Wind-Diesel-Grid : 0.5 - 1 $/litre	21,968,520.00	0.1482	932,603.00	0	6,600,593	-	7,966,696	4,171,575
PV-Wind-Diesel-Grid-BESS : 0.3 $/litre	19,807,000.00	0.1337	815,211.70	5,325,636	1,206,921	106,961	7,898,661	4,947,207
PV-Wind-Diesel-Grid-BESS : 0.4 $/litre	21,867,360.00	0.1476	925,276.00	375,687	6,152,148	75,789	7,893,938	4,157,481
PV-Wind-Diesel-Grid-BESS : 0.5 - 1 $/litre	21,878,460.00	0.1476	925,868.80	0	6,527,835	75,789	7,893,938	4,125,592

4.3.1. Grid system with and without battery bank

From Table 11, the emissions from the energy supplied by the grid is 5,003,062 kg/yr with the total energy of 7,916,237 kWh purchased annually at a cost of energy of 0.11 $/kWh. By comparing the grid system and grid-battery systems, it is observed that the incorporation of a battery energy storage facility into the grid reduces the total net present cost by $75,260 (approximately 0.46%). The cost of energy is reduced by $0.0005 (about 0.45%) and the operating cost is reduced by $5,943.9 (about 0.68%). Also, incorporating the battery bank reduces the annual amount of energy purchased from grid and total electricity production by 65,573 kWh/yr (about 0.83%) due to battery bank energy output of 68,305 kWh/yr and CO_2 emissions are reduced by 41,442 kg/yr (about 0.83%). Hence, incorporating battery bank into existing grid provides a better performance for the energy supply system in terms of reduced overall cost of system operation, better energy output and reduced emissions.

4.3.2. PV-Grid system with and without battery bank

Considering incorporating the photovoltaic system with grid for a PV-Grid HRES with and without a battery bank to supply the university's demand, it is observed from Table 11 that deploying just a PV-grid system has a total net present cost of $16,373,010.00, the cost of energy is 0.1105 $/kWh for an operating cost of $765,653.30. The amount of energy purchased from the grid is 6,898,659 kWh/yr with a total electricity production of 7,960,568 kWh/yr and CO_2 emissions of 4,359,953 kg/yr. Incorporating a battery into the PV-Grid system for a PV-Grid-Battery HRES reduces the total net present cost by $78,710 (about 0.48%). Also, it reduces the cost of energy by $ 0.0005 (about 0.45%) and the operating cost by $6,127.4 (about 0.8%). The amount of energy purchased from the grid and total electricity production is reduced by 67,242 kWh/yr (about 0.97% for grid purchases and 0.84% for the total electricity production) with a battery bank energy contribution of 700,444 kWh/yr. However, incorporating the battery bank has no effect on the CO_2 emissions for this energy system. Hence, due to the better performance of this system in terms of overall reduction in the cost of the system and a better energy output, the PV-Grid-Battery HRES is a better option for meeting the energy demand of Covenant University than the PV-Grid system.

4.3.3. Wind-Grid system with and without battery bank

In the case of Wind-Grid HRES with and without a battery bank to supply the university's demand, there is a total net present cost of $21,883,710.00, the cost of energy is 0.1477 $/kWh for an operating

cost of $1,037,062.00 without battery storage system. The amount of energy purchased from the grid is 7,612,042 kWh/yr with a total electricity production of 7,916,237 kWh/yr and CO_2 emissions of 4,810,810 kg/yr. However, incorporating battery storage into the Wind-Grid system for a Wind-Grid-Battery HRES reduces the total net present cost by $75,270 (about 0.34%). Also, it reduces the cost of energy by $0.0005 (about 0.34%) and the operating cost by $5,944 (about 0.57%). The amount of energy purchased from the grid and total electricity production is reduced by 65,573 kWh/yr (about 0.86% for grid purchases and 0.83% for total electricity production) with a battery bank energy contribution of 68,305 kWh/yr. However, incorporating the battery bank has no effect on the CO_2 emissions for this energy system. Hence, due to the better performance in terms of overall reduction in the cost of the system and a better energy output, the Wind-Grid-Battery HRES is a better option for meeting the energy demand of Covenant University than the Wind-Grid system.

4.3.4. PV-Wind-Grid system with and without battery bank

With the incorporation of photovoltaic system, wind turbine system and grid, without battery energy storage, there is a total net present cost of $21,968,520.00, cost of energy is 0.1482 $/kWh for a total operating cost of $932,603.00, as shown on Table 11. The amount of energy purchased from the grid is 6,600,593 kWh/yr with a total electricity production of 7,966,696 kWh/yr and CO_2 emissions of 4,171,575 kg/yr. However, incorporating a battery into the PV-Wind-Grid system reduces the total net present cost by $90,060 (about 0.41%). Also, it reduces the cost of energy by $0.0006 (about 0.40%) and the operating cost by $6,734.2 (about 0.72%). The amount of energy purchased from the grid and total electricity production is reduced by 72,758 kWh/yr (about 1.10% for grid purchases and 0.91% for total electricity production) with a battery bank energy contribution of 75,789 kWh/yr. Incorporating the battery bank reduces the CO_2 emissions for this energy system by 45,983 kg/yr (about 1.1%). Hence, due to the better performance of this system in terms of overall reduction in the cost of the system, a better energy output and reduction in the CO_2 emissions, the PV-Wind-Grid-Battery HRES is considered as a better option for meeting the energy demand of Covenant University than the PV-Wind-Grid system.

4.3.5. Diesel-Grid system with and without battery bank

Combining energy supply from backup Diesel genset with main supply from the grid at a diesel fuel price sensitivity of 0.3 $/litre without battery storage system reduces the total net present cost by

$72,040 (about 0.54%). Also, it reduces the cost of energy by $0.00049 (about 0.54%) and the operating cost by $5771.6 (about 0.81%). The amount of energy produced by the diesel genset is reduced by 279,820 kWh/yr (about 3.74%). The amount of energy purchased from the grid is increased by 175,137 kWh/yr (about 36.05%) while the total electricity production is reduced by 104,683 kWh/yr (about 1.32%) with a battery bank energy contribution of 90,949 kWh/yr. Incorporating the battery bank reduces the CO_2 emissions for this energy system by 121,226 kg/yr (about 1.97%). For the diesel sensitivity of 0.4 $/litre with battery, the total net present cost is reduced by $75,260 (about 0.46%) and the cost of energy is reduced by $0.0005 (about 0.45%). The operating cost is reduced by $5943.8 (about 0.68%) and the total amount of energy produced by the diesel genset is not affected. The amount of energy purchased from the grid is decreased by 65,573 kWh/yr (about 0.90%) while the total electricity production is reduced by 65,573 kWh/yr (about 0.83%) with a battery bank energy contribution of 68,305 kWh/yr. Incorporating the battery bank reduces the CO_2 emissions for this energy system by 41,442 kg/yr (about 0.82%). Also, for the diesel sensitivity range of 0.5 $/litre - 1 $/litre, incorporating a battery reduces total net present cost by $75,260 (about 0.46%). Also, it reduces the cost of energy by $0.0005 (about 0.45%) and the operating cost by $5943.9 (about 0.68%). The amount of energy produced by the diesel genset is not affected and the amount of energy purchased from the grid is decreased by 65,573 kWh/yr (about 0.83%) while the total electricity production is reduced by 65,573 kWh/yr (about 0.83%) with a battery bank energy contribution of 68,305 kWh/yr. Incorporating the battery bank reduces the CO_2 emissions for this energy system by 41,442 kg/yr (about 0.83%). Hence, due to the better performance of this system in terms of overall reduction in the cost of the system, a better energy output and reduction in the CO_2 emissions, the Diesel-Grid-Battery HRES is a better option for meeting the energy demand of Covenant University than the Diesel-Grid system for all the diesel fuel price sensitivities.

4.3.6. PV-Diesel-Grid system with and without battery bank

Considering the combination of photovoltaic system and diesel genset with the grid at a diesel fuel price sensitivity of 0.3 $/litre, it is observed from Table 11 that with battery the total net present cost is reduced by $93,390 (about 0.66%). Also, it reduces the cost of energy by $0.00063 (about 0.66%) and the operating cost by $6911.80 (about 1.07%). The amount of energy produced by the diesel genset is reduced by 233,367 kWh/yr (about 3.91%). The amount of energy purchased from the grid is increased by 123,479 kWh/yr (about 12.57%) while the total electricity production is reduced by 109,889 kWh/yr

(about 1.37%) with a battery bank energy contribution of 99,723 kWh/yr. Incorporating the battery bank also reduces the CO_2 emissions for this energy system by 113,829 kg/yr (about 2.15%). For the diesel price sensitivity of 0.4 $/litre, incorporating a battery into the PV-Diesel Genset-Grid system for a PV-Diesel-Grid-Battery HRES reduces the total net present cost by $78,710 (about 0.48%). Also, it reduces the cost of energy by $0.0005 (about 0.45%) and the operating cost by $6127.40 (about 0.80%). The amount of energy produced by the diesel genset is not affected. The amount of energy purchased from the grid is decreased by 67,243 kWh/yr (about 1.04%) while the total electricity production is reduced by 67,242 kWh/yr (about 0.84%) with a battery bank energy contribution of 70,044 kWh/yr. Incorporating the battery bank reduces the CO_2 emissions for this energy system by 42,498 kg/yr (about 0.97%).

Also, for the diesel sensitivity range of 0.5 $/litre – 1.0 $/litre, incorporating a battery into the PV-Diesel Genset-Grid system for a PV-Diesel-Grid-Battery HRES reduces the total net present cost by $78,710 (about 0.48%). Also, it reduces the cost of energy by $0.0005 (about 0.45%) and the operating cost by $6127.40 (about 0.80%). The amount of energy produced by the diesel genset is not affected. The amount of energy purchased from the grid is decreased by 67,242 kWh/yr (about 0.97%) while the total electricity production is reduced by 67,241 kWh/yr (about 0.84%) with a battery bank energy contribution of 70,044 kWh/yr. Incorporating the battery bank reduces the CO_2 emissions for this energy system by 42,497 kg/yr (about 0.97%). Hence, due to the better performance of this system in terms of overall reduction in the cost of the system, a better energy output and reduction in the CO_2 emissions, the PV-Diesel-Grid-Battery HRES is a better option for meeting the energy demand of the study site for all the diesel fuel price sensitivities.

4.3.7. Wind-Diesel-Grid system with and without battery bank

The combination of wind turbine system and diesel genset with the grid at a diesel fuel price sensitivity of 0.3 $/litre to supply the university's demand reduces the total net present cost by $78,210 (about 0.41%) when battery storage system is incorporated. Also, it reduces the cost of energy by $0.0006 (about 0.46%) and the operating cost by $6101.1 (about 0.68%). The amount of energy produced by the diesel genset is reduced by 266,991 kWh/yr (about 3.83%). The amount of energy purchased from the grid is increased by 160,498 kWh/yr (about 23.45%) while the total electricity production is reduced by 106,492 kWh/yr (about 1.34%) with a battery bank energy contribution of 93,989 kWh/yr. Incorporating the battery bank also reduces the CO_2 emissions for this energy system

by 119,185 kg/yr (about 2.02%). For the diesel sensitivity of 0.4 $/litre, incorporating a battery reduces the total net present cost by $ 75,260 (about 0.34%). Also, it reduces the cost of energy by $ 0.0005 (about 0.34%) and the operating cost by $ 5944 (about 0.57%). The amount of energy produced by the diesel genset is not affected and the amount of energy purchased from the grid is decreased by 65,573 kWh/yr (about 0.92%) while the total electricity production is reduced by 65,573 kWh/yr (about 0.83%) with a battery bank energy contribution of 68,305 kWh/yr. Incorporating the battery bank also reduced the CO_2 emissions by 41,442 kg/yr (about 0.85%).

Also, for the diesel price sensitivity range of 0.5 $/litre to 1.0 $/litre, incorporating a battery reduces the total net present cost by $ 75,270 (about 0.34%). Also, it reduces the cost of energy by $ 0.0005 (about 0.34%) and the operating cost by $ 5944 (about 0.57%). The amount of energy produced by the diesel genset is not affected. The amount of energy purchased from the grid is decreased by 65,573 kWh/yr (about 0.86%) while the total electricity production is reduced by 65,573 kWh/yr (about 0.83%) with a battery bank energy contribution of 68,305 kWh/yr. Incorporating the battery bank reduces the CO_2 emissions for this energy system by 41,442 kg/yr (about 0.86%). Hence, due to the better performance of this system in terms of overall reduction in the cost of the system, a better energy output and reduction in the CO_2 emissions, the Wind-Diesel-Grid-Battery HRES is a better option for meeting the site's energy demand for all the considered diesel fuel price sensitivities.

4.3.8. PV-Wind-Diesel-Grid system with and without battery bank

The combination of photovoltaic system, wind turbine system, diesel genset with the grid, for a diesel fuel price sensitivity of 0.3 $/litre, it is observed from Table 11 that incorporating a battery reduces the total net present cost by $ 108,370 (about 0.54%). Also, it reduces the cost of energy by $ 0.0007 (about 0.52%) and the operating cost by $7712.3 (about 0.94%). The amount of energy produced by the diesel genset is reduced by 223,041 kWh/yr (about 4.02%). The amount of energy purchased from the grid is increased by 107,156 kWh/yr (about 9.74%) while the total electricity production is reduced by 115,884 kWh/yr (about 1.45%) with a battery bank energy contribution of 106,961 kWh/yr. Incorporating the battery bank also reduces the CO_2 emissions for this energy system by 115,373 kg/yr (about 2.28%). For the diesel price sensitivity of 0.4 $/litre, incorporating a battery reduces the total net present cost by $ 90,060 (about 0.41%). Also, it reduces the cost of energy by $ 0.0006 (about 0.40%) and the operating cost by $ 6734.2 (about 0.72%). The amount of energy produced by the diesel genset is not affected. The amount of energy purchased from the grid is

decreased by 72,758 kWh/yr (about 1.17%) while the total electricity production is reduced by 72,758 kWh/yr (about 0.91%) with a battery bank energy contribution of 75,789 kWh/yr. Incorporating the battery bank reduces the CO_2 emissions for this energy system by 45,983 kg/yr (about 1.09%).

For the diesel price sensitivity range from 0.5 $/litre to 1.0 $/litre, incorporating a battery reduces the total net present cost by $ 90,060 (about 0.41%). Also, it reduces the cost of energy by $ 0.0006 (about 0.40%) and the operating cost by $ 6734.2 (about 0.72%). The amount of energy produced by the diesel genset is not affected. The amount of energy purchased from the grid is decreased by 72,758 kWh/yr (about 1.10%) while the total electricity production is reduced by 72,758 kWh/yr (about 0.91%) with a battery bank energy contribution of 75,789 kWh/yr. Incorporating the battery bank reduces the CO_2 emissions for this energy system by 45,983 kg/yr (about 1.10%). Hence, due to the better performance of this system in terms of overall reduction in the cost of the system, a better energy output and reduction in the CO_2 emissions, the PV-Wind-Diesel-Grid-Battery HRES is a better option for meeting the energy demand of Covenant University than the PV-Wind-Diesel-Grid system for all the analyzed diesel fuel price sensitivities.

Generally, from all the above comparisons as drawn from Table 11, it can be concluded that for each configuration of the energy components for the HRES design, incorporating the battery bank storage facility had a better performance in terms of overall reduced cost of the system, reduced emissions and better energy output. Hence, only the hybrid renewable energy system configurations incorporating the 90-string zinc bromide battery bank would be considered for the optimal HRES design.

4.4. Economic implications of wind-incorporated hybrid systems

From Table 11, it can be observed that any hybrid renewable energy system configuration incorporating the wind turbine generator presents a very high overall cost and a poorer energy output than the other systems without the wind turbine generator. The very high cost is due to the high capital cost and O&M cost of the wind turbine generator. The poorer energy output of any wind incorporated HRES is due to the poor energy output of wind turbine generator as a result of the low wind speeds available in the geographical location of Covenant University. The maximum power obtained from the wind turbine generator is 61.91 kW in the month of February with the highest wind speed of 4.30 m/s in the same month. With the maximum power of the wind turbine generator at 61.91 kW for the maximum wind speed of 4.30 m/s, the wind turbine can only meet a very small fraction of the energy demand of Covenant University for any configuration of the HRES as presented in the simula-

tion results. Thus, from the available wind profile, the wind turbine generator cannot be included for a cost-efficient optimal configuration for an hybrid renewable energy system that can meet the energy demand of Covenant University.

4.5. Best results for the HRES configurations based on different diesel fuel price sensitivities

Table 12, Table 13 and Table 14 are extracted from Table 11 to present the best options for the HRES (with battery storage and excluding the wind turbine) for different diesel fuel price sensitivities using the eight system performance parameters.

Table 12: Comparison of results for the best HRES designs for 0.3 $/litre fuel sensitivity

System	**Total NPC**	**COE**	**Operating Cost**	**Diesel Production**	**Grid Purchases**	**BESS Output**	**Total Energy**	**CO_2 Emissions**
Units	$	$/kWh	$	kWh/yr	kWh/yr	kWh/yr	kWh/yr	kg/yr
Grid-BESS	16,225,550.00	0.1095	864,842.20	-	7,850,664	68,305	7,850,664	4,961,620
PV-Grid-BESS	16,294,300.00	0.11	759,525.90	-	6,831,417	70,044	7,893,326	4,359,953
Diesel-Grid-BESS : 0.3 $/litre	13,320,900.00	0.08989	709,676.60	7,194,133	661,001	90,949	7,855,134	6,022,029
PV-Diesel-Grid-BESS : 0.3 $/litre	14,045,770.00	0.09478	639,409.70	5,730,093	1,105,692	99,723	7,897,693	5,192,407

Table 13: Comparison of results for the best HRES designs for 0.4 $/liter fuel sensitivity

System	**Total NPC**	**COE**	**Operating Cost**	**Diesel Production**	**Grid Purchases**	**BESS Output**	**Total Energy**	**CO_2 Emissions**
Units	$	$/kWh	$	kWh/yr	kWh/yr	kWh/yr	kWh/yr	kg/yr
Grid-BESS	16,225,550.00	0.1095	864,842.20	-	7,850,664	68,305	7,850,664	4,961,620
PV-Grid-BESS	16,294,300.00	0.11	759,525.90	-	6,831,417	70,044	7,893,326	4,359,953
Diesel-Grid-BESS : 0.4 $/litre	16,206,800.00	0.1094	863,840.50	638,890	7,211,774	68,305	7,850,664	5,015,893
PV-Diesel-Grid-BESS : 0.4 $/litre	16,281,790.00	0.1099	758,857.70	437,944	6,393,473	70,044	7,893,326	4,354,780

Table 14: Comparison of results for the best HRES designs for 0.5 - 1.0 $/litre sensitivity

System	**Total NPC**	**COE**	**Operating Cost**	**Diesel Production**	**Grid Purchases**	**BESS Output**	**Total Energy**	**CO_2 Emissions**
Units	$	$/kWh	$	kWh/yr	kWh/yr	kWh/yr	kWh/yr	kg/yr
Grid-BESS	16,225,550.00	0.1095	864,842.20	-	7,850,664	68,305	7,850,664	4,961,620
PV-Grid-BESS	16,294,300.00	0.11	759,525.90	-	6,831,417	70,044	7,893,326	4,359,953
Diesel-Grid-BESS : 0.5 - 1 $/litre	16,225,550.00	0.1095	864,842.20	0	7,850,664	68,305	7,850,664	4,961,620
PV-Diesel-Grid-BESS : 0.5 - 1 $/litre	16,294,300.00	0.11	759,525.90	0	6,831,417	70,044	7,893,326	4,317,456

4.5.1. Optimal results for the 0.3 $/litre diesel fuel sensitivity

For the diesel fuel price sensitivity of 0.3 $/litre, results for the best possible combinations for the HRES configuration is given in Table 12. The is clearly illustrated in terms of the considered performance parameters in figure 7. The cost of energy is not adequately captured in the figure because the values are very small compared to the other parameters.

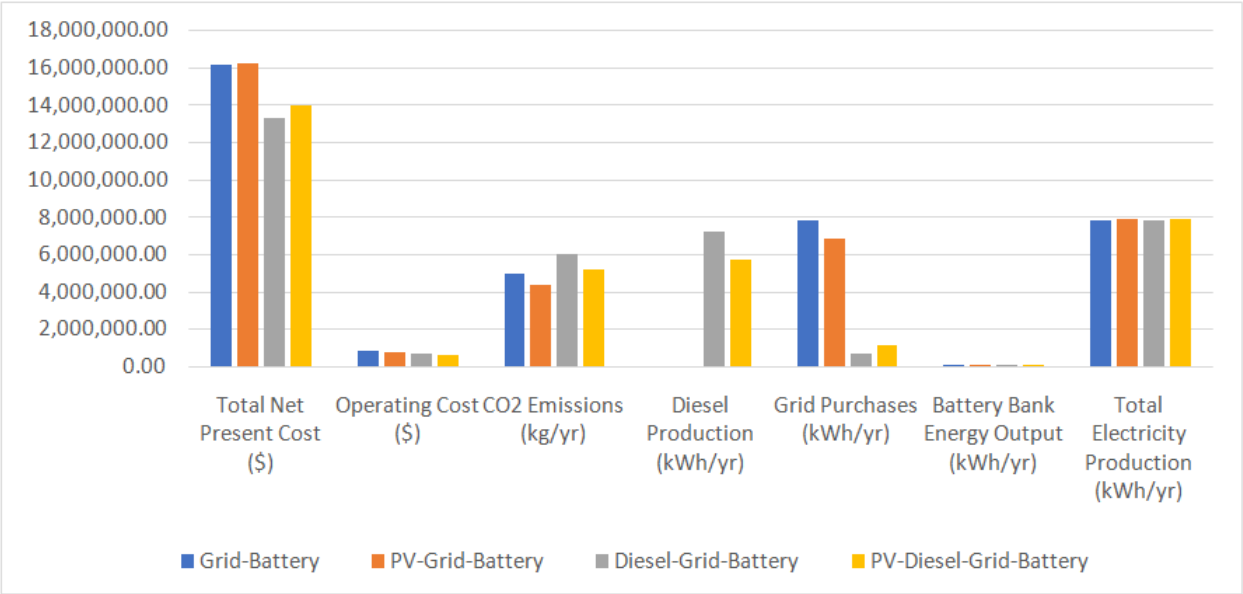

Figure 7: Comparison of the best systems for 0.3 $/litre sensitivity

From Table 12, the configurations with the lowest overall costs are the Diesel-Grid-Battery and the PV-Diesel-Grid-Battery system. The configuration that has the lowest total net present cost ($) is the Diesel-Grid-Battery System with a cost of $ 13,320,900 which is lower than the PV-Diesel-Grid-Battery cost by $ 724,870, lower than the PV-Grid-Battery system by $ 2,973,400 and lower than the Grid-Battery System by $ 2,904,650. Similarly, the configuration with the lowest cost of energy is the Diesel-Grid-Battery System with 0.08989 $/kWh which is lower than the PV-Diesel-Grid System by 0.00489 $/kWh, lower than the PV-Grid-Battery system by 0.02011 $/kWh and lower than the Grid-Battery system by 0.01961 $/kWh. However, the operating cost of the PV-Diesel-Grid-Battery System is the lowest at $ 639,409.70. It is lower than the operating cost of the Diesel-Grid-Battery system by $ 70,266.90, lower than the PV-Grid-Battery system by $ 120,116.20 and lower than the Grid-Battery System by $ 225,432.50. Based on the first three parameters, it is obvious that the best energy systems are the Diesel-Grid-Battery and the PV-Diesel-Grid-Battery systems. According to the Diesel genset production, the PV-Diesel-Grid-Battery System had a lower production at 5,730,093 kWh/yr which is

lower than the Diesel-Grid-Battery system by 1,464,040 kWh/yr. The lower diesel genset production of the PV-Diesel-Grid-Battery system is preferable as it connotes lesser operation time which means lesser diesel fuel costs, lesser operation/running costs, lesser maintenance costs, lesser no. of starts and lesser faults.

However, due to the lesser diesel genset production, the amount of energy purchased from the grid in the PV-Diesel-Grid-Battery system is more than the amount of energy purchased from the grid by the Diesel-Grid-Battery system by 444,691 kWh/yr which purchased 661,001 kWh kWh/yr. Also, the energy purchased from the grid by the Diesel-Grid-Battery system is lesser than that purchased by the Grid-Battery system and PV-Grid-Battery system by 7,189,663 kWh/yr and 6,170,416 kWh/yr respectively. The battery bank energy output contribution is the highest in the PV-Diesel-Grid-Battery system at 99,723 kWh/yr which is higher than the Diesel-Grid-Battery by 8,774 kWh/yr, higher than the Grid-Battery system and PV-Grid-Battery system by 31,418 kWh/yr and 29,679 kWh/yr respectively. The largest total amount of electricity produced is by the PV-Diesel-Grid-Battery,which is 7,897,693kWh/yr. The electricity produced by this system is more than the electricity produced by the Diesel-Grid-Battery system by 42,559 kWh/yr, the PV-Grid-Battery system by 4,367 kWh/yr and the Grid-Battery system by 47,029 kWh/yr. Moreover, based on the CO_2 emissions of the HRES configurations, the diesel incorporated energy systems have the worst amount of CO_2 emissions with the best amount from the PV-Grid-Battery system at 4,359,953 kg/yr. The worst CO_2 emission is from the Diesel-Grid-Battery system at 6,022,029 kg/yr which is more than that of the PV-Diesel-Grid-Battery system by 829,622 kg/yr.

The optimal HRES design for the fuel sensitivity of 0.3 $/litre based on the comparison and discussion from Table 12 is the PV-Diesel-Grid-Battery hybrid renewable energy system due to its better overall performance based on the given parameters than any other design presented. Despite having a higher net present costs, slightly higher cost of energy and higher grid purchases than the Diesel-Grid-Battery system, the PV-Diesel-Grid-Battery system has a lower operating cost, lesser diesel genset electricity production, higher battery bank energy output contribution, higher total electricity production and much lower CO_2 emissions than the Diesel-Grid-Battery Systems which puts it over the top of the system. Also, despite the PV-Diesel-Grid-Battery system having higher emissions than both the Grid-Battery and PV-Grid-Battery system, it has an overall reduced cost than both systems and better energy output in terms of higher electricity production and reduced grid energy purchases.

4.5.2. Optimal results for the 0.4 $/litre diesel fuel sensitivity

Now, for the diesel fuel price sensitivity for 0.4 $/litre, the results for the best possible configurations for the HRES configuration is given below in Table 13. figure 8 clearly illustrates the performance comparisons using the eight performance parameters for the 0.4 $/litre diesel price sensitivity factor.

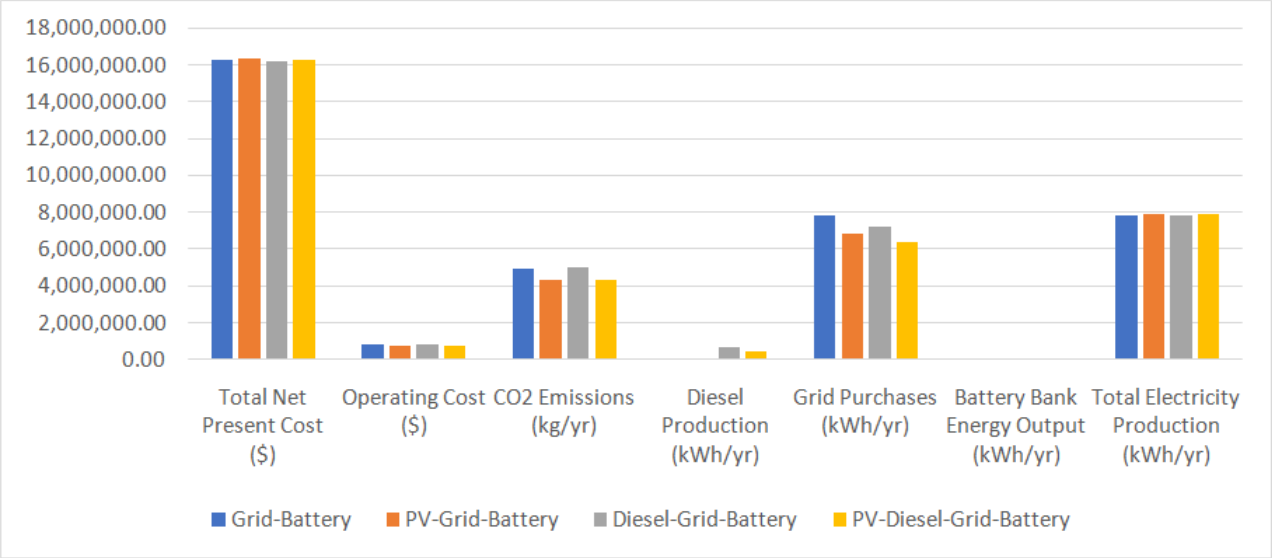

Figure 8: Comparison of the best systems for 0.4 $/litre sensitivity

From Table 13, the configuration that has the lowest total net present cost ($) is the Diesel-Grid-Battery System with a cost of $ 16,206,800 which is lower than the PV-Diesel-Grid-Battery cost by $ 74,990, lower than the PV-Grid-Battery system by $ 87,500 and lower than the Grid-Battery System by $ 18,750. Similarly, the configuration with the lowest cost of energy is the Diesel-Grid-Battery System with 0.1094 $/kWh which is lower than the PV-Diesel-Grid System by 0.0005 $/kWh, lower than the PV-Grid-Battery system by 0.0006 $/kWh and lower than the Grid-Battery system by 0.0001 $/kWh. However, the operating cost of the PV-Diesel-Grid-Battery System is the lowest at $ 758,857.70. It is lower than the operating cost of the Diesel-Grid-Battery system by $ 104,982.80, lower than the PV-Grid-Battery system by $ 668.20 and lower than the Grid-Battery System by $ 105,984.50. Based on the first three parameters, it is obvious that the best energy systems are the Diesel-Grid-Battery and the PV-Diesel-Grid-Battery systems.

According to the Diesel genset production, the PV-Diesel-Grid-Battery System had a lower production at 437,944 kWh/yr which is lower than the Diesel-Grid-Battery system by 200,946 kWh/yr. The lower diesel genset production of the PV-Diesel-Grid-Battery system is preferable as it connotes

lesser operation time which means lesser diesel fuel costs, lesser operation/running costs, lesser maintenance costs, lesser no. of starts and lesser faults. Furthermore, the amount of energy purchased from the grid by the PV-Diesel-Grid-Battery system is the lowest at 6,393,473 kWh/yr. It is lower than the amount of energy purchased from the grid by the Diesel-Grid-Battery system by 818,301 kWh/yr which purchased 7,211,774 kWh kWh/yr. Also, the energy purchased from the grid by the PV-Diesel-Grid-Battery system is lesser than that purchased by the Grid-Battery system and PV-Grid-Battery system by 1,457,191 kWh/yr and 437,944 kWh/yr respectively. The battery bank energy output contribution is the highest in the PV-Diesel-Grid-Battery system at 70,044 kWh/yr which is higher than the Diesel-Grid-Battery by 1,739 kWh/yr, higher than the Grid-Battery system by 1,739 kWh/yr and equal to the PV-Grid-Battery system. The largest total amount of electricity produced is by the PV-Diesel-Grid-Battery which is 7,893,326 kWh/yr. The electricity produced by this system is more than the electricity produced by the Diesel-Grid-Battery system by 42,662 kWh/yr, same as the PV-Grid-Battery and more than the Grid-Battery system by 42,662 kWh/yr. The best amount of CO_2 emissions is from the PV-Diesel-Grid-Battery system at 4,354,780 kg/yr while the worst CO_2 emission is from Diesel-Grid-Battery system at 5,015,893 kg/yr. The CO_2 emissions of the PV-Diesel-Grid-Battery system is better than that of the Diesel-Grid-Battery system by 661,113 kg/yr, the PV-Grid-Battery system by 5,173 kg/yr and the Grid-Battery system by 606,840 kg/yr.

The optimal HRES design for the fuel sensitivity of 0.4 $/litre based on the comparison and discussion from Table 13 is the PV-Diesel-Grid-Battery hybrid renewable energy system due to its better overall performance based on the given parameters than any other design presented. Despite having a higher net present costs and slightly higher cost of energy than the Diesel-Grid-Battery system, the PV-Diesel-Grid-Battery system has a lower operating cost, lesser diesel genset electricity production, higher battery bank energy output contribution, lower grid energy purchases, higher total electricity production and much lower CO_2 emissions than the Diesel-Grid-Battery Systems which puts it over the top of the system. Also, despite the PV-Diesel-Grid-Battery system having equal amount of total electricity produced and battery bank energy contribution with the PV-Grid-Battery system as well as the slightly higher net present cost and cost of energy than the Grid-Battery system, it has an overall reduced cost than both systems, better CO_2 emissions and better energy output in terms of higher electricity production and reduced grid energy purchases.

4.5.3. Optimal results for the 0.5 $/litre - 1.0 $/litre diesel fuel sensitivity range

Finally, for the diesel fuel price sensitivity range 0.5 $/litre - 1.0 $/litre, the results for the best possible configurations for the HRES configuration is given below in Table 14. figure 9 illustrates the comparisons of the considered HRES configuration for 0.5 - 1.0 $/litre diesel price sensitivity range based on the system economic, technical and emission performance parameters.

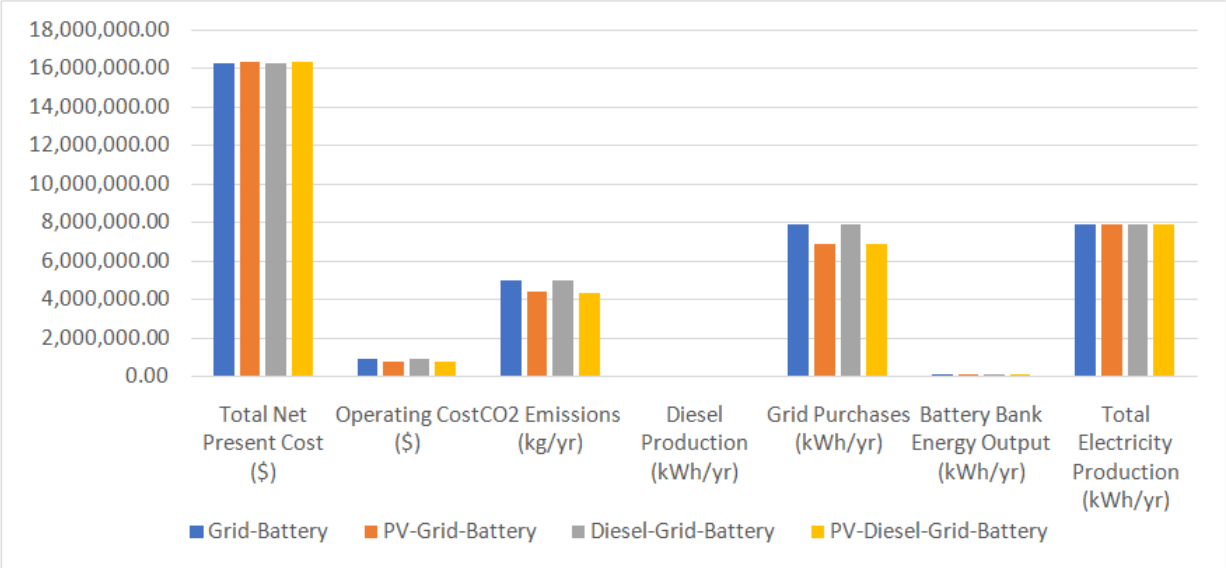

Figure 9: Comparison of the best systems for 0.5 - 1.0 $/litre sensitivity

From Table 14, the configuration that has the lowest total net present cost ($) is Diesel-Grid-Battery System with a cost of $ 16,225,550 which is lower than that of PV-Diesel-Grid-Battery cost by $ 68,750 and equal to that of Grid-Battery System. Similarly, the configuration with the lowest cost of energy is the Diesel-Grid-Battery System with 0.1095 $/kWh which is lower than the cost of PV-Diesel-Grid system by 0.0005 $/kWh and almost the same as the Grid-Battery system cost. However, operating cost of the PV-Diesel-Grid-Battery System is the lowest at $ 759,525.90. It is lower than operating cost of Diesel-Grid-Battery system by $ 105,316.30, same as cost of PV-Grid-Battery system and lower than the cost of Grid-Battery System by $ 105,316.30.

According to the diesel genset production, PV-Diesel-Grid-Battery System has no production from the diesel genset, the same as the Diesel-Grid-Battery system. This shows that it is not economically feasible or cost-effective to use the diesel generator set as one of the main energy supply components in the system according to HOMER simulation. That is, running the diesel generator set actively in the energy supply system is not cost-effective or optimal. Hence, the diesel generator set is designed as a

backup system in the event of any outages either due to fault or maintenance of the main power supply components. Furthermore, the amount of energy purchased from the grid by the PV-Diesel-Grid-Battery system is the same as that purchased by the PV-Grid-Battery system at 6,831,417 kWh/yr. It is lower than the amount of energy purchased from the grid by the Diesel-Grid-Battery system by 1,019,247 kWh/yr.

The battery bank energy output contribution is the highest in both the PV-Diesel-Grid-Battery and PV-Grid-Battery systems at 70,044 kWh/yr which is higher than both the Diesel-Grid-Battery and Grid-Battery systems by 1,739 kWh/yr. The largest total amount of electricity produced is by both the PV-Diesel-Grid-Battery and PV-Grid-Battery systems at 7,893,326 kWh/yr. The electricity produced by this system is more than the electricity produced by both the Diesel-Grid-Battery system and Grid-Battery system by 42,662 kWh/yr. The values of PV-Grid-Battery and PV-Diesel-Grid-Battery systems as well as the Grid-Battery and Diesel-Grid-Battery are the same due to the lack of active operation of the diesel generator set. Considering the CO_2 emissions of the HRES configurations, the best amount of CO_2 emissions is from the PV-Diesel-Grid-Battery system at 4,317,456 kg/yr while the worst CO_2 emission is from both the Grid-Battery and the Diesel-Grid-Battery systems at 4,961,620 kg/yr. The CO_2 emissions of the PV-Diesel-Grid-Battery system is better than that of the Diesel-Grid-Battery and Grid-Battery systems by 644,164 kg/yr and better than the PV-Grid-Battery system by 42,497 kg/yr.

The optimal HRES design for the considered study site based on the comparisons and discussions from above is the PV-Diesel-Grid-Battery as presented in Table 15 for all the considered performance parameters and at all diesel fuel price sensitivity values. Despite having a higher net present costs and slightly higher cost of energy than both Diesel-Grid-Battery and Grid-Battery systems, PV-Diesel-Grid-Battery system has a lower operating cost, lesser diesel genset electricity production, higher battery bank energy output contribution, lower grid energy purchases, higher total electricity production and much lower CO_2 emissions compared to the other HRES configurations.

Table 15: PV-Diesel-Grid-BESS HRES for all the diesel fuel sensitivities

System	Total NPC	COE	Operating Cost	Diesel Production	Grid Purchases	BESS Output	Total Energy	CO_2 Emissions
Units	$	$/kWh	$	kWh/yr	kWh/yr	kWh/yr	kWh/yr	kg/yr
PV-Diesel-Grid-BESS: 0.3 $/litre	14,045,770.00	0.09478	639,409.70	5,730,093	1,105,692	99,723	7,897,693	5,192,407
PV-Diesel-Grid-BESS: 0.4 $/litre	16,281,790.00	0.1099	758,857.70	437,944	6,393,473	70,044	7,893,326	4,354,780
PV-Diesel-Grid-BESS: 0.5 - 1 $/litre	16,294,300.00	0.11	759,525.90	0	6,831,417	70,044	7,893,326	4,317,456

5. Conclusions

In this study, the best configuration for a grid-connected hybrid renewable energy system towards sustainable and smart energy resource management for Covenant University in Nigeria has been investigated. The key features of the research design and simulation results are:

- Several possible configurations of plausible renewable energy systems in the study site incorporated into the grid system and with an arrangement for diesel generator backup was considered using diesel fuel price sensitivities ranging from 0.3 $/litre to 1.0 $/litre.

- the possibilities of battery energy storage system (BESS) inclusion, yielded thirty-two (32) different possible configurations which were analyzed using HOMER software for determining the most effective HRES.

- From the simulation results, it is established that the inclusion of BESS reduces the net present cost (NPC) and the effective cost of electricity considerably for all the considered scenarios. However, the inclusion of wind system appears to be techno-economic infeasible for the study site due to the high capital and O&M cost, as well as, the low wind potential recorded at the study site (even at a height of 55 meters). Thus, investment on wind energy supply system is discouraged at the study site for optimal return on investment.

- For different diesel fuel sensitivities considered, the most optimal techno-economic configuration of the HRES with the best overall performances for all the considered parameters is the PV-Grid-Battery hybrid renewable energy system with diesel generator included as backup.

The detailed analysis presented in this work provides an all-inclusive template that can be reliably considered in the design and planning of a smart energy resource management system for academic, residential and other commercial facilities towards attaining the reliable, sustainable and affordable energy supply goal of the united nation's sustainable development program. The main limitations of this work is the availability of and accessibility to reliable data sources for the study site. However, this challenge is well taken care of by combining data from several available online data banks and extracting data components with reasonable fidelity which sufficiently captures the required information needed for simulation.

Acknowledgments

The first author thank Covenant University Centre for Research, Innovation and Discovery (CU-CRID) for providing the platform and necessary resources for carrying out this study.

Conflicts of interest

The authors declare no conflict of interest.

CRediT authorship contribution statement

Ayooluwa A. AJIBOYE: Conceptualization, investigation, modelling, simulation, writing - Original draft, review & editing; Segun I. POPOOLA: Simulation, Validation, Writing - review & editing; Oludamilare Bode ADEWUYI: Resource, Writing - review & editing, correspondence; Aderemi A. ATAYERO: Supervision, validation, proofreading; Bamidele ADEBISI: Resource and validation.

References

[1] A. Azam, M. Rafiq, M. Shafique, H. Zhang, M. Ateeq, J. Yuan, Analyzing the relationship between economic growth and electricity consumption from renewable and non-renewable sources: Fresh evidence from newly industrialized countries, Sustainable Energy Technologies and Assessments 44 (2021) 100991. URL: http://www.sciencedirect.com/science/article/pii/S2213138821000011. doi:https://doi.org/10.1016/j.seta.2021.100991.

[2] K. V. Konneh, H. Masrur, D. A. Konneh, T. Senjyu, Independent or complementary power system configuration: A decision making approach for sustainable electrification of an urban environment in sierra leone, Energy 239 (2022) 122310.

[3] O. Espinoza, A. Tiwary, Assessment of autonomous renewable energy system operability under extreme events and disasters, Sustainable Energy Technologies and Assessments 44 (2021) 100995. URL: http://www.sciencedirect.com/science/article/pii/S2213138821000059. doi:https://doi.org/10.1016/j.seta.2021.100995.

[4] K. V. Konneh, H. Masrur, M. L. Othman, T. Senjyu, Performance assessment of a hybrid complementary power system for sustainable electrification: A case study, Sustainable Cities and Society 76 (2022) 103412.

[5] I. E. Agency, Key world energy statistics, 2015. URL: https://www.iea.org/.

[6] I. E. Agency, Key world energy statistics, 2017. URL: https://www.iea.org/.

[7] W. Thomas, M. Haigh, Shell. world energy model. a view to 2100, 2017.

[8] B. Dudley, et al., Bp statistical review of world energy, in: World Petroleum Congress: London, 2016.

[9] O. B. Adewuyi, M. K. Kiptoo, A. F. Afolayan, T. Amara, O. I. Alawode, T. Senjyu, Challenges and prospects of nigeria's sustainable energy transition with lessons from other countries' experiences, Energy Reports 6 (2020) 993 – 1009. URL: http://www.sciencedirect.com/science/article/pii/S2352484719308832. doi:https://doi.org/10.1016/j.egyr.2020.04.022.

[10] O. B. Adewuyi, O. A. Komolafe, Optimal operational analysis of off-grid hybrid renewable energy system with multiple storage facilities, International Journal of Scientific and Engineering Research 7 (2016) 379–390.

[11] M. K. Kiptoo, O. B. Adewuyi, M. E. Lotfy, T. Senjyu, P. Mandal, M. Abdel-Akher, Multi-objective optimal capacity planning for 100% renewable energy-based microgrid incorporating cost of demand-side flexibility management, Applied Sciences 9 (2019) 3855.

[12] B. Ai, H. Yang, H. Shen, X. Liao, Computer-aided design of pv/wind hybrid system, Renewable Energy 28 (2003) 1491 – 1512. URL: http://www.sciencedirect.com/science/article/pii/S0960148103000119. doi:https://doi.org/10.1016/S0960-1481(03)00011-9.

[13] Y. Ding, Q. Wang, X. Kong, K. Yang, Multi-objective optimisation approach for campus energy plant operation based on building heating load scenarios, Applied Energy 250 (2019) 1600 – 1617. URL: http://www.sciencedirect.com/science/article/pii/S0306261919308244. doi:https://doi.org/10.1016/j.apenergy.2019.04.164.

[14] D. Hasapis, N. Savvakis, T. Tsoutsos, K. Kalaitzakis, S. Psychis, N. P. Nikolaidis, Design of large scale prosuming in universities: The solar energy vision of the tuc campus, Energy and Buildings 141 (2017) 39 – 55. URL: http://www.sciencedirect.com/science/article/pii/S0378778817302724. doi:https://doi.org/10.1016/j.enbuild.2017.01.074.

[15] Y. Zhu, F. Wang, J. Yan, The potential of distributed energy resources in building sustainable campus: The case of sichuan university, Energy Procedia 145 (2018) 582 – 585. URL: http://www.sciencedirect.com/science/article/pii/S1876610218300936. doi:https://doi.org/10.1016/j.egypro.2018.04.085, renewable Energy Integration with Mini/Microgrid.

[16] A. Franco, M. Shaker, D. Kalubi, S. Hostettler, A review of sustainable energy access and technologies for healthcare facilities in the global south, Sustainable Energy Technologies and Assessments 22 (2017) 92 – 105. URL: http://www.sciencedirect.com/science/article/pii/S2213138817301376. doi:https://doi.org/10.1016/j.seta.2017.02.022.

[17] M. H. Jahangir, R. Cheraghi, Economic and environmental assessment of solar-wind-biomass hybrid renewable energy system supplying rural settlement load, Sustainable Energy Technologies and Assessments 42 (2020) 100895.

[18] A. Baruah, M. Basu, D. Amuley, Modeling of an autonomous hybrid renewable energy system for electrification of a township: A case study for sikkim, india, Renewable and Sustainable Energy Reviews 135 (2021) 110158. URL: http://www.sciencedirect.com/science/article/pii/S1364032120304494. doi:https://doi.org/10.1016/j.rser.2020.110158.

[19] J. C. Alberizzi, J. M. Frigola, M. Rossi, M. Renzi, Optimal sizing of a hybrid renewable energy system: Importance of data selection with highly variable renewable energy sources, Energy Conversion and Management 223 (2020) 113303. URL: http://www.sciencedirect.com/science/article/pii/S0196890420308414. doi:https://doi.org/10.1016/j.enconman.2020.113303.

[20] B. K. Das, M. Hasan, F. Rashid, Optimal sizing of a grid-independent pv/diesel/pump-hydro hybrid system: A case study in bangladesh, Sustainable Energy Technologies and Assessments 44 (2021) 100997. URL: http://www.sciencedirect.com/science/article/pii/S2213138821000072. doi:https://doi.org/10.1016/j.seta.2021.100997.

[21] C. Mokhtara, B. Negrou, A. Bouferrouk, Y. Yao, N. Settou, M. Ramadan, Integrated supply–demand energy management for optimal design of off-grid hybrid renewable energy systems for residential electrification in arid climates, Energy Conversion and Man-

agement 221 (2020) 113192. URL: http://www.sciencedirect.com/science/article/pii/S0196890420307366. doi:https://doi.org/10.1016/j.enconman.2020.113192.

[22] V. Suresh, M. M., R. Kiranmayi, Modelling and optimization of an off-grid hybrid renewable energy system for electrification in a rural areas, Energy Reports 6 (2020) 594 – 604. URL: http://www.sciencedirect.com/science/article/pii/S2352484718304499. doi:https://doi.org/10.1016/j.egyr.2020.01.013.

[23] B. Ariyo, M. Akorede, I. Omeiza, S. Amuda, S. Oladeji, Optimisation analysis of a stand-alone hybrid energy system for the senate building, university of ilorin, nigeria, Journal of Building Engineering 19 (2018) 285 – 294. URL: http://www.sciencedirect.com/science/article/pii/S2352710217305120. doi:https://doi.org/10.1016/j.jobe.2018.05.015.

[24] M. Zahran, A. Yousef, Photovoltaic wind-turbine battery hybrid system monitoring using labview virtual environment, Journal of Electrical Engineering 14 (2014) 1–12.

[25] M. Bertsiou, E. Feloni, D. Karpouzos, E. Baltas, Water management and electricity output of a hybrid renewable energy system (hres) in fournoi island in aegean sea, Renewable Energy 118 (2018) 790 – 798. URL: http://www.sciencedirect.com/science/article/pii/S0960148117311795. doi:https://doi.org/10.1016/j.renene.2017.11.078.

[26] A. Buonomano, F. Calise, M. D. d'Accadia, M. Vicidomini, A hybrid renewable system based on wind and solar energy coupled with an electrical storage: Dynamic simulation and economic assessment, Energy 155 (2018) 174 – 189. URL: http://www.sciencedirect.com/science/article/pii/S0360544218308259. doi:https://doi.org/10.1016/j.energy.2018.05.006.

[27] J. Jung, M. Villaran, Optimal planning and design of hybrid renewable energy systems for microgrids, Renewable and Sustainable Energy Reviews 75 (2017) 180–191.

[28] M. Rezaei, S. A. Alharbi, A. Razmjoo, M. A. Mohamed, Accurate location planning for a wind-powered hydrogen refueling station: Fuzzy vikor method, International Journal of Hydrogen Energy 46 (2021) 33360–33374.

[29] M. Rezaei, U. Dampage, B. K. Das, O. Nasif, P. F. Borowski, M. A. Mohamed, Investigating the impact of economic uncertainty on optimal sizing of grid-independent hybrid renewable energy systems, Processes 9 (2021) 1468.

[30] T. Xia, M. Rezaei, U. Dampage, S. A. Alharbi, O. Nasif, P. F. Borowski, M. A. Mohamed, Techno-economic assessment of a grid-independent hybrid power plant for co-supplying a remote micro-community with electricity and hydrogen, Processes 9 (2021) 1375.

[31] L. Al-Ghussain, A. D. Ahmad, A. M. Abubaker, M. A. Mohamed, An integrated photovoltaic/wind/biomass and hybrid energy storage systems towards 100% renewable energy microgrids in university campuses, Sustainable Energy Technologies and Assessments 46 (2021) 101273.

[32] L. Al-Ghussain, A. D. Ahmad, A. M. Abubaker, M. Abujubbeh, A. Almalaq, M. A. Mohamed, A demand-supply matching-based approach for mapping renewable resources towards 100% renewable grids in 2050, IEEE Access 9 (2021) 58634–58651.

[33] S. I. Popoola, A. A. Atayero, T. T. Okanlawon, B. I. Omopariola, O. A. Takpor, Smart campus: Data on energy consumption in an ict-driven university, Data in Brief 16 (2018) 780 – 793. URL: http://www.sciencedirect.com/science/article/pii/S235234091730687X. doi:https://doi.org/10.1016/j.dib.2017.11.091.

[34] S. Bahramara, M. P. Moghaddam, M. Haghifam, Optimal planning of hybrid renewable energy systems using homer: A review, Renewable and Sustainable Energy Reviews 62 (2016) 609 – 620. URL: http://www.sciencedirect.com/science/article/pii/S1364032116301496. doi:https://doi.org/10.1016/j.rser.2016.05.039.

[35] S. M. Dawoud, X. Lin, M. I. Okba, Hybrid renewable microgrid optimization techniques: A review, Renewable and Sustainable Energy Reviews 82 (2018) 2039 – 2052. URL: http://www.sciencedirect.com/science/article/pii/S1364032117311383. doi:https://doi.org/10.1016/j.rser.2017.08.007.

[36] E. Kabalci, Design and analysis of a hybrid renewable energy plant with solar and wind power, Energy Conversion and Management 72 (2013) 51 – 59. URL: http://www.sciencedirect.com/science/article/pii/S0196890413001271. doi:https://doi.org/10.1016/j.enconman.2012.08.027, the III. International Conference on Nuclear and Renewable Energy Resources NURER2012.

[37] S. Aissou, D. Rekioua, N. Mezzai, T. Rekioua, S. Bacha, Modeling and control of hybrid photovoltaic wind power system with battery storage, Energy Conversion and Management 89 (2015) 615 – 625. URL: http://www.sciencedirect.com/science/article/pii/S0196890414009157. doi:https://doi.org/10.1016/j.enconman.2014.10.034.

[38] S. Bhattacharjee, S. Acharya, Pv-wind hybrid power option for a low wind topography, Energy Conversion and Management 89 (2015) 942 – 954. URL: http://www.sciencedirect.com/science/article/pii/S0196890414009601. doi:https://doi.org/10.1016/j.enconman.2014.10.065.

[39] H. Al-Hamidi, J. A. Asfar, Hybrid renewable energy system with minimum noise wind turbine, Renewable Energy 114 (2017) 581 – 587. URL: http://www.sciencedirect.com/science/article/pii/S0960148117306274. doi:https://doi.org/10.1016/j.renene.2017.07.015.

[40] F. Mostofi, H. Shayeghi, Feasibility and optimal reliable design of renewable hybrid energy system for rural electrification in iran, International Journal of Renewable Energy Research (IJRER) 2 (2012) 574–582.

[41] Wind energy potential in selected areas in jordan, Energy Conversion and Management 65 (2013) 704 – 708. Global Conference on Renewable energy and Energy Efficiency for Desert Regions 2011.

[42] D. K. Lal, B. B. Dash, A. K. Akella, Optimization of pv/wind/micro-hydro/diesel hybrid power system in homer for the study area, 2011.

[43] C. Carrillo, J. Cidrás, E. Díaz-Dorado, A. Obando-Montaño, An approach to determine the weibull parameters for wind energy analysis: The case of galicia (spain), Energies 7 (2014) 2676–2700.

[44] J. Seguro, T. Lambert, Modern estimation of the parameters of the weibull wind speed distribution for wind energy analysis, Journal of Wind Engineering and Industrial Aerodynamics 85 (2000) 75 – 84. URL: http://www.sciencedirect.com/science/article/pii/S0167610599001221. doi:https://doi.org/10.1016/S0167-6105(99)00122-1.

[45] M. F. Akorede, M. I. M. Rashid, M. H. Sulaiman, N. B. Mohamed, S. B. A. Ghani, Appraising the viability of wind energy conversion system in the peninsular malaysia, Energy Conversion and Management 76 (2013) 801 – 810. URL: http://www.sciencedirect.com/science/article/pii/S0196890413004779. doi:https://doi.org/10.1016/j.enconman.2013.08.018.

[46] K. Tar, Some statistical characteristics of monthly average wind speed at various heights, Renewable and Sustainable Energy Reviews 12 (2008) 1712 – 1724. URL: http://www.sciencedirect.com/science/article/pii/S1364032107000342. doi:https://doi.org/10.1016/j.rser.2007.01.014.

[47] B. O. Bilal, V. Sambou, C. Kb, P. Ndiaye, M. Ndongo, Methodology to size an optimal stand-alone pv/wind/diesel/battery system minimizing the levelized cost of energy and the co2 emissions, Energy Procedia 14 (2012) 1636 – 1647. URL: http://www.sciencedirect.com/science/article/pii/S1876610211045656. doi:https://doi.org/10.1016/j.egypro.2011.12.1145, 2011 2nd International Conference on Advances in Energy Engineering (ICAEE).

[48] H. Borhanazad, S. Mekhilef, V. G. Ganapathy, M. Modiri-Delshad, A. Mirtaheri, Optimization of micro-grid system using mopso, Renewable Energy 71 (2014) 295 – 306. URL: http://www.sciencedirect.com/science/article/pii/S0960148114002572. doi:https://doi.org/10.1016/j.renene.2014.05.006.

[49] J. Ab. Razak, K. Sopian, A. Yusoff, M. Alghoul, A. Zaharim, I. Ahmad, Optimization of pv-wind-hydro-diesel hybrid system by minimizing excess capacity, European Journal of Scientific Research 25 (2009) 663–671.

[50] S. Piller, M. Perrin, A. Jossen, Methods for state-of-charge determination and their applications, Journal of Power Sources 96 (2001) 113 – 120. URL: http://www.sciencedirect.com/science/article/pii/S0378775301005602. doi:https://doi.org/10.1016/S0378-7753(01)00560-2, proceedings of the 22nd International Power Sources Symposium.

[51] S. Blaifi, S. Moulahoum, N. Kabache, I. Colak, An improved dynamic battery model suitable for photovoltaic applications, in: 2015 International Conference on Renewable Energy Research and Applications (ICRERA), 2015, pp. 694–698. doi:10.1109/ICRERA.2015.7418500.

[52] J. O. Okeniyi, A. A. Atayero, S. I. Popoola, E. T. Okeniyi, G. M. Alalade, Smart campus: Data on energy generation costs from distributed generation systems of electrical energy in a nigerian university, Data in Brief 17 (2018) 1082 – 1090. URL: http://www.sciencedirect.com/science/article/pii/S2352340918301380. doi:https://doi.org/10.1016/j.dib.2018.02.022.

Table 16: Appendix: Covenant University Daily Energy Consumption (in MWh) for 2019 [33]

Day	**Jan**	**Feb**	**March**	**April**	**May**	**June**	**July**	**Aug**	**Sept**	**Oct**	**Nov**	**Dec**
1	22.35	29.18	11.91	26.97	18.64	19.23	17.90	15.19	22.97	26.89	12.74	13.41
2	21.55	18.55	17.12	25.87	23.00	19.24	12.69	18.46	28.21	25.64	23.41	18.86
3	22.35	31.04	22.70	30.03	25.65	18.22	12.11	18.99	24.52	28.14	23.59	19.07
4	30.53	34.11	19.33	27.36	29.59	17.05	15.01	16.74	26.32	31.97	22.50	16.58
5	32.78	33.21	9.21	28.55	29.14	14.56	15.23	20.58	28.69	32.87	19.77	15.77
6	21.15	24.60	15.97	24.50	29.01	20.19	14.92	17.50	28.62	33.14	18.73	16.61
7	25.48	26.44	23.16	26.17	23.14	15.95	14.68	12.66	28.67	29.60	23.89	19.04
8	26.63	34.77	23.18	27.84	13.91	8.93	14.50	11.30	29.64	28.80	18.53	18.12
9	21.55	5.72	12.16	20.03	24.26	16.23	13.43	11.85	28.18	26.71	25.71	17.46
10	22.35	31.00	8.13	31.77	8.34	16.15	18.07	15.71	27.18	30.37	21.81	20.17
11	30.53	16.53	24.30	31.89	23.05	14.59	11.43	15.96	25.12	31.01	21.79	14.13
12	32.78	18.04	21.08	22.85	17.12	14.36	15.47	18.31	20.51	26.97	22.34	6.45
13	21.10	22.00	21.00	28.31	24.13	12.98	15.34	15.38	25.90	25.37	22.29	18.14
14	32.26	16.85	32.03	26.79	7.48	19.58	15.00	16.98	24.66	28.26	27.66	11.00
15	32.56	33.70	16.49	24.12	13.29	19.58	14.94	17.67	33.30	22.22	23.31	11.58
16	28.30	33.40	22.64	21.16	12.11	17.48	12.80	21.83	29.00	18.86	23.59	11.33
17	28.12	32.55	24.01	27.72	14.67	17.74	11.87	21.17	25.02	20.86	23.44	9.90
18	34.57	21.31	31.88	29.37	23.02	15.12	14.18	24.75	28.42	22.79	20.33	12.09
19	33.11	19.47	30.78	21.67	19.37	13.92	14.49	24.80	30.33	21.32	16.57	10.75
20	31.55	13.27	28.89	24.98	21.42	16.02	12.30	21.97	28.49	20.18	18.08	10.51
21	32.27	15.20	29.87	23.88	17.39	16.42	11.77	22.75	29.39	21.57	20.17	9.84
22	29.42	20.69	32.51	21.99	15.46	18.23	12.52	32.84	30.94	19.83	19.22	9.44
23	23.39	14.18	33.59	32.00	18.40	21.78	11.10	4.31	30.72	22.92	18.58	8.47
24	20.11	13.87	21.03	12.14	20.97	17.93	11.31	27.87	27.69	19.32	25.21	8.60
25	29.31	23.32	27.58	12.18	20.69	19.53	14.29	26.93	25.54	26.29	18.71	12.05
26	17.88	15.55	29.50	12.22	19.55	15.71	15.57	26.61	29.64	23.41	20.03	10.22
27	27.43	26.47	28.99	35.08	21.30	17.72	15.86	21.82	29.97	24.72	18.86	9.99
28	27.83	18.04	29.47	6.23	17.47	16.82	17.07	26.00	30.45	20.60	23.34	12.83
29	25.72	17.81	35.79	10.04	17.53	13.19	14.19	26.74	31.94	30.08	22.62	12.17
30	24.89	N/A	35.02	27.85	15.25	19.37	12.96	27.25	31.03	22.46	14.49	12.12
31	24.93	N/A	24.42	N/A	21.32	N/A	13.43	10.12	N/A	22.86	N/A	14.87
SUM	834.76	660.87	743.74	721.56	605.67	503.82	436.43	611.04	841.06	786.03	631.31	411.57
AVG	26.93	22.79	23.99	24.05	19.54	16.79	14.08	19.71	28.04	25.36	21.04	13.28
MAX VAL.	34.57	34.77	35.79	35.08	29.59	21.78	18.07	32.84	33.30	33.14	27.66	20.17
MIN VAL.	17.88	5.72	8.13	6.23	7.48	8.93	11.10	4.31	20.51	18.86	12.74	6.45
S. DEV.	4.6845	7.9299	7.3843	7.1966	5.5764	2.6663	1.7367	6.2996	2.6964	4.3238	2.9233	3.8183