IEEE Access
Multidisciplinary : Rapid Review : Open Access Journal

Received March 26, 2019, accepted April 10, 2019, date of current version August 26, 2019.

Digital Object Identifier 10.1109/ACCESS.2019.2912931

Smart Wireless Power Transmission System for Autonomous EV Charging

MATJAZ ROZMAN[1], (Student Member, IEEE), AUGUSTINE IKPEHAI[2], (Member, IEEE), BAMIDELE ADEBISI[1], (Senior Member, IEEE), KHALED M. RABIE[1], (Member, IEEE), HARIS GACANIN[3], (Member, IEEE), HELEN JI[1], AND MICHAEL FERNANDO[4], (Member, IEEE)

[1]Department of Engineering, Manchester Metropolitan University, Manchester M1 5GD, U.K.
[2]Department of Engineering and Mathematics, Sheffield Hallam University, Sheffield S1 1WB, U.K.
[3]Nokia Bell Labs, Antwerpen 2018, Belgium
[4]Faculty of Architecture, Computing and Engineering, University of Wales Trinity Saint David, Swansea SA1 6ED, U.K.

Corresponding author: Matjaz Rozman (matjaz.rozman@stu.mmu.ac.uk)

This work was supported by the European Commission through the Horizon 2020 Smart Cities and Communities Programme under Grant 646578- Triangulum- H2020-2014-2015/H2020-SCC-2014.

ABSTRACT This paper presents a novel localization method for electric vehicles (EVs) charging through wireless power transmission (WPT). With the proposed technique, the wireless charging system can self-determine the most efficient coil to transmit power at the EV's position based on the sensors activated by its wheels. To ensure optimal charging, our approach involves measurement of the transfer efficiency of individual transmission coil to determine the most efficient one to be used. This not only improves the charging performance but also minimizes energy losses by autonomously activating only the coils with the highest transfer efficiencies. The results show that with the proposed system, it is possible to detect the coil with maximum transmitting efficiency without the use of actual power transmission and comparison of the measured efficiency. This paper also proves that with the proposed charger set-up, the position of the receiver coil can be detected almost instantly, which indeed saves energy and boosts the charging time.

INDEX TERMS Wireless power transmission, car charging, electrical vehicle, efficiency, charging pad, sensor network, smart charger.

I. INTRODUCTION

Transportation plays a major role in day to day life. According to [1], approximately 70% of the United Kingdom (UK) households own a minimum of one vehicle. In 2016, the UK alone had more than 30 millions cars registered and driven on the roads. The vehicle licensing statistics shows that in 2016, around 3.3 millions cars were registered for the first time and 42,000 of the vehicles were ultra low emission vehicles (ULEVs) [2]. It has also been predicted that by 2030, about 60% of all new vehicles sales in the UK will be electric vehicles (EVs) [3], regarded as one of the most promising alternatives to the fossil fuel vehicles. Statistics indicate that in July 2018, 162,000 plug-in EVs (PEVs) were used on the roads. Furthermore, the number of electric cars models and brands available in the UK market have also grown rapidly during the recent years. Today in the UK, 75 different models of PEVs are available with roughly 20,000 charging points installed around the country [4].

The associate editor coordinating the review of this manuscript and approving it for publication was Giambattista Gruosso.

However, charging cables are still used to connect the cars to the charging stations which is not sustainable [5] in the long-term. One of the obvious advantages of wireless power transmission (WPT) over wired ones is its significantly lower cost of infrastructure maintenance. Since it was first proposed by Sultanbek *et al.* [6], in 2007, WPT has gained popularity due to its simplicity and functionality [7]. Over the past few years, it has been implemented in a wide range of applications from household applications [8], [9] to medical implants [10]. In the past few years, researchers have been working towards implementation of WPT technology in the EVs [11], [12]. They have been able to develop a method to transmit power to the EV with inductive WPT (IWPT) [13] as well as capacitive WPT (CWPT) techniques [14]. IPWT especially offers many advantages, such as its ability to transfer power both unidirectionally and bidirectionally [15], [16]. Also the transmission efficiency has significantly improved over the years. Currently, efficiency of the WPT system can reach up to 96% however, it strongly depends on the transmitter and receiver loop alignments [17].

The contribution of this paper resides in proposing a novel approach to location-based car charging. The charger uses a sensor array to detect the car position based on the activated sensors beneath the wheels. When the sensors are activated, the algorithm calculates the size of the vehicle and estimates the transmission loop with highest efficiency around the current EV position. Since the sensors are interconnected to the transmitter, communication between the vehicle and the smart charger is required. If the car changes its position, the network will sense any variations instantly and compensate the transmitting coil accordingly. We demonstrate that the proposed location-based smart charger also reduces the amount of energy required to locate the loop with highest efficiency, thus the array network uses a low power supply. With the proposed sensor network, a car maximizes the actual charging time since the car position is instantly sensed without interrupting the charging process.

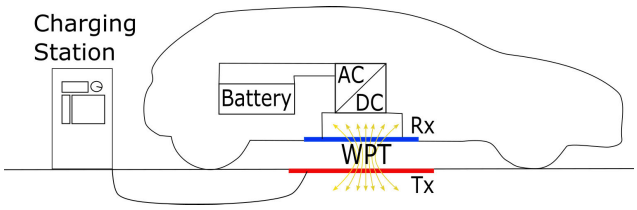

FIGURE 1. EV wireless power transmission charging with the charging pad placed under the vehicle.

II. RELATED WORKS

A conventional EV WPT charger is shown in Fig. 1 where the transmitter loop is placed under the EV and the receiver loop is fitted on its body. The parking spot is designed to offer the driver sufficient parking space and safe exit. However, the spatial freedom in parking spaces is also a challenge for the WPT transmitter design [18]. According to [19], the minimum parking space for a car is 4.8m in length with 2.4m width. Therefore, the WPT charger should ideally be able to transfer power with its highest efficiency regardless of the vehicle position.

Different methods of IWPT have been proposed in recent years. For instance, the authors in [20] proposed replacing the circular coil structure of the pad with quadrature coil combined with DD coil design. New DD-DDQ coil design improves a pad's charging zone and therefore reduces the cost of the pad. A tripod was proposed in [21] where the transmitter unit is built with 3 individual charging coils connected to each other in a circular structure. According to the authors, the proposed structure reduced the magnetic flux leakage. The location finder technique using laser [23], [24] can determine the location of the vehicle with a millimeter range accuracy. However, such a system requires computer based processing methods, which increase the power consumption of the whole system.

Distinct methods to improve the spatial freedom of WPT charger were proposed by [22], where the power transmission is combined with a super capacitor (SC) to form an energy buffer. A multi-coil charger was also investigated in [25]–[27] to increase the receiver's flexibility based on free positioning of the transmitter. The proposed multi-loop transmitter contains two or more loops which are embedded in the same transmitter. The loop used to transmit power to the receiver is calculated based on the measured results of the individual transmissions. The advantage of this method is that the power is consistently transmitted with the highest possible efficiency. However, continuous communication between the transmitter and receiver has to be established and numerous measurements have to be conducted such as calibration during the charging period and after, in case the object re-positions.

III. WIRELESS CHARGING PADS MODEL

A vital aspect of the car charging pad design is to cover multiple positions of a car in a parking facility. To sense the position of the vehicle, the wheels need to be placed within the pre-marked parking spaces. For experimental purposes, the properties of the three prominent EV models used in the UK are presented in Table 1, and the dimensions of a cars are illustrated in Fig. 2. While designing a charging system, the most crucial factors that need to be considered are the distance between the center of the rear and front wheels (wheelbase), marked as D, as well as the distance between the left and right front wheels (track distance), marked as B.

TABLE 1. Dimensions of the three most popular car currently in the U.K. market. [28].

Model	Height	Width	Wheelbase	Length
Renault Zoe	1562mm	2588mm	2637mm	4084mm
Tesla Model S	1445mm	2960mm	2630mm	4979mm
BMW i3	1598mm	1775mm	2570mm	4006mm

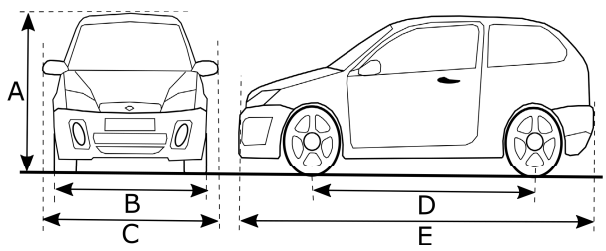

FIGURE 2. A car's dimensions; height (A), track distance (B), width (C), wheelbase (D), and length (E).

The most common EVs on the UK roads are Renault Zoe, Tesla Model S and BMW i3 [28]. With respect to the dimensions of EVs, it is evident that despite the similarities between the length of the Renault Zoe and BMW i3, their widths differ. Tesla Model S is a considerably larger vehicle. Therefore, depending on the wheelbase and the track distance, it is possible to determine the model of a vehicle based on the activated sensors. Upon successful determination of the EV's dimension, the system can effectively calculate the optimal transmit coil to be used based on the current parking position.

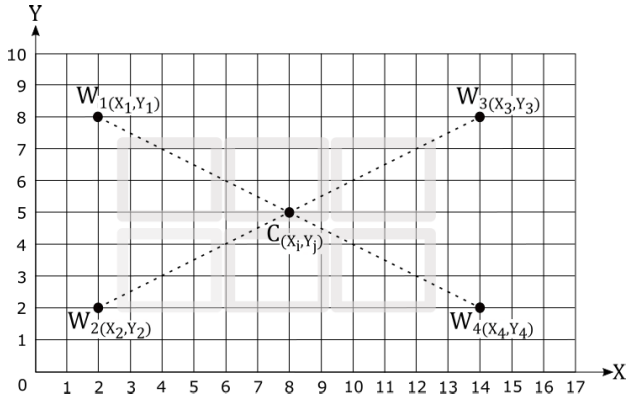

FIGURE 3. Two dimensional network of the parking space which is used to calculate the EV position, size and the WPT coil with highest efficiency of charging.

The location of the vehicle in the parking space can be computed by its coordinates within the cartesian plane, where each of the four vertices of the vehicle has known coordinates as shown in Fig. 3. From these coordinates, properties such as the width and length can be calculated. The coordinates of each wheel are given by $W_i = W_{(Xi,Yi)}$. To determine the wheelbase and track distance, the distance between the wheels is calculated as follows

$$d_{(Wi,Wj)} = \sqrt{d^2_{(W_{Xi},W_{Xj})} + d^2_{(W_{Yi},W_{Yj})}}. \tag{1}$$

In Eq. (1) $d_{(Wi,Wj)}$ is the distance between the two measured wheel positions, W_i and W_j. The shortest distance is calculated as the distance between the two front wheels while the longest is the wheelbase. Based on these results, the car's dimensions can be estimated.

To determine which transmitter coil will function at its highest efficiency at the EV's current position, the center of the car has to be determined. Within the cartesian plane, the center of the EV is determined as the point of intersection of the diagonals. Therefore, the center of the EV can be calculated as the center between the two nodes as

$$C_{(i,j)} = \left(\frac{W_{Xi} + W_{Xj}}{2}\right), \left(\frac{W_{Yi} + W_{Yj}}{2}\right). \tag{2}$$

The oscillating frequency of the WPT system is given by $\omega_0 = \frac{1}{\sqrt{LC}}$ where the L and C are the inductance and capacitance of the system respectively. The quality factor of the coil, Q has a strong impact on the efficiency of the system and can be expressed as $Q = \sqrt{\frac{L}{C}}\frac{1}{R} = \frac{\omega_0 L}{R}$, where Q decreases as the coil resistance increases. The mutual inductance between the two coil is given by $M = k\sqrt{L_T L_R}$, where L_T and L_R are self inductances of the transmitter and receiver coil and k represents a coupling factor between the two coils. Considering self inductances of each coil, the mutual inductance can be calculated as

$$M = k\sqrt{\frac{1}{\pi}\mu_0 A}\sqrt{\frac{1}{\pi}\mu_0 B}, \tag{3}$$

where μ_0 represents vacuum permeability and

$$\begin{aligned} A = {} & (-2)\sqrt{(l_1 - r_w)^2 + r_w^2} + \frac{r_w^2}{sinh(l_1 - r_w)} \\ & + 2\sqrt{(l_1 - r_w)^2 + (w_1 - r_w)^2} + \frac{(r_w - l_1)(l_1 - r_w)}{sinh(l_1 - r_w)} \\ & - \frac{(w_1 - r_w)^2}{sinh(r_w)} - 2ln(r_w) - 2(r_w^2 + \sqrt{(w_1 - r_w)^2} \\ & + \frac{2r_w^2}{sinh(w_1 - r_w)} + 2\sqrt{2r_w} + \frac{(w_1 - r_w)^2}{sinh(r_w)} + \sqrt{2} \end{aligned} \tag{4}$$

$$\begin{aligned} B = {} & (-2)\sqrt{(l_2 - r_w)^2 + r_w^2} + \frac{r_w^2}{sinh(l_2 - r_w)} \\ & + 2\sqrt{(l_2 - r_w)^2 + (w_2 - r_w)^2} + \frac{(r_w - l_2)(l_2 - r_w)}{sinh(l_2 - r_w)} \\ & - \frac{(w_2 - r_w)^2}{sinh(r_w)} - 2ln(r_w) - 2(r_w^2 + \sqrt{(w_2 - r_w)^2} \\ & + \frac{2r_w^2}{sinh(w_2 - r_w)} + 2\sqrt{2r_w} + \frac{(w_2 - r_w)^2}{sinh(r_w)} + \sqrt{2}. \end{aligned} \tag{5}$$

The length of the loops of the transmitter and receiver coils are represented by l_1 and l_2 respectively, and r_w represents the cross-section radius of the coil. The width of the transmitter loop is denoted by w_1 while the receiver loop width is w_2. System efficiency is strongly associated with mutual inductance, transmitting frequency and resistance of both coils. It can be calculated as

$$\eta = \frac{k^2\omega^2\sqrt{\frac{\mu_0}{\pi}C^2}\sqrt{\frac{\mu_0}{\pi}D^2}}{R_T R_R(1 + \sqrt{\frac{1}{R_T R_R k\omega^2\sqrt{\frac{\mu_0}{\pi}C}\sqrt{\frac{\mu_0}{\pi}D}}})^2}, \tag{6}$$

where

$$\begin{aligned} C = {} & (-2)ln(r_w) + \frac{(l_1 - r_w)^2}{sinh(r_w)} + \frac{r_w^2}{sinh(l_1 - r_w)} \\ & + \frac{2r_w^2}{sinh(-r_w^2 + w_1)} + \frac{(l_1 - r_w)(-l_1 + r_w)}{sinh(-r_w^2 + w_1)} \\ & - \frac{(-r_w + w_1)^2}{sinh(l_1 - r_w)} + \sqrt{2} + 2\sqrt{2r_w} - 2\sqrt{(l_1 - r_w)^2 + r_w^2} \\ & - 2(r_w^2 + \sqrt{(-r_w + w_1)^2}) + 2\sqrt{(l_1 - r_w)^2 + (-r_w + w_1)^2} \end{aligned} \tag{7}$$

and

$$\begin{aligned} D = {} & (-2)ln(r_w) + \frac{(l_2 - r_w)^2}{\sinh(r_w)} + \frac{r_w^2}{\sinh(l_2 - r_w)} \\ & + \frac{2r_w^2}{\sinh(-r_w^2 + w_2)} + \frac{(l_2 - r_w)(-l_2 + r_w)}{\sinh(-r_w^2 + w_2)} \\ & - \frac{(-r_w + w_2)^2}{\sinh(l_2 - r_w)} + \sqrt{2} + 2\sqrt{2r_w} - 2\sqrt{(l_2 - r_w)^2 + r_w^2} \\ & - 2(r_w^2 + \sqrt{(-r_w + w_2)^2}) + 2\sqrt{(l_2 - r_w)^2 + (-r_w + w_2)^2} \end{aligned} \tag{8}$$

IV. PROPOSED WIRELESS CHARGING PAD

The smart WPT proposed in this paper is information-centric such that a wireless sensor array is integrated with the charging system to a-priori determine the positions of each wheel of the parked vehicle before activating the transmitter coils. Once successfully parked, the weight of the vehicle activates the sensor array underneath the wheels. The control unit senses this outcome as a logic "1" on its input. Based on the combination of the sensed logic inputs, the algorithm determines the most suitable coil to transmit power at the given car's position. The control unit activates the corresponding switch on the switching circuit based on computation results. Thereafter, the electrical switch connects the wireless charger in the EV with the transmitter coil, initiating power transmission. The flowchart of the system is illustrated in Fig. 4.

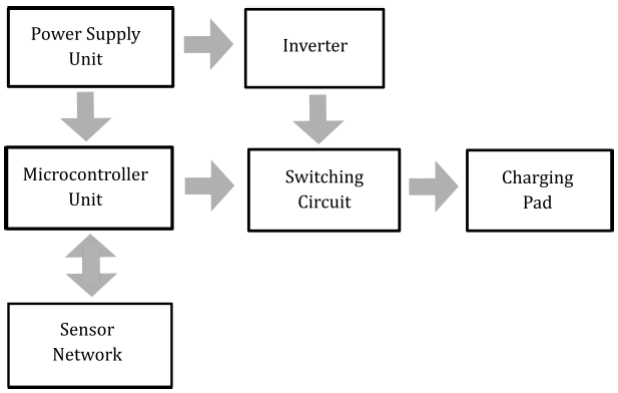

FIGURE 4. Block diagram of the proposed charger with the micro controller as the main intelligent element between the sensors and the charging pad.

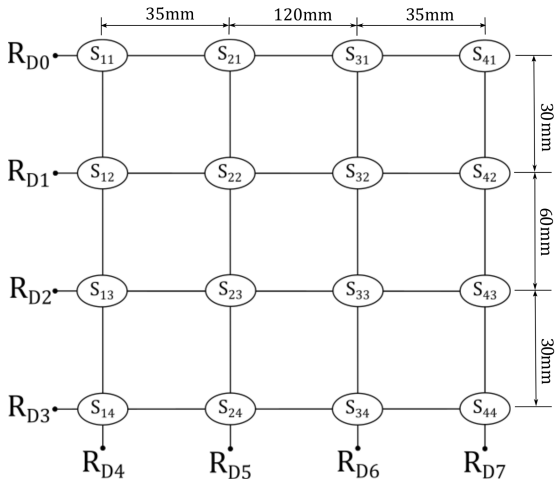

FIGURE 5. Charging pad sensor network that senses the car wheels to calculate of the a car's receiver coil.

A. WIRELESS SENSOR ARRAY DEFINITION

Fig. 5 illustrates a parking space model which consists of an inbuilt array of 16 independent sensors. The proposed sensor array can be described as a 4×4 matrix, where each set of four sensors is responsible for determining the position of a wheel. The precision of calculating the car's position can be optimized by increasing the number of sensors. However, that will simultaneously increase the complexity of the control unit and algorithm. In the end, the cost of implementation will also increase. Alternatively, precision can be enhanced by using existing sensors to measure the position of three or two wheels in diagonal positions. Thus, the algorithms require at least two wheels to be positioned diagonally in order to determine the charger's position.

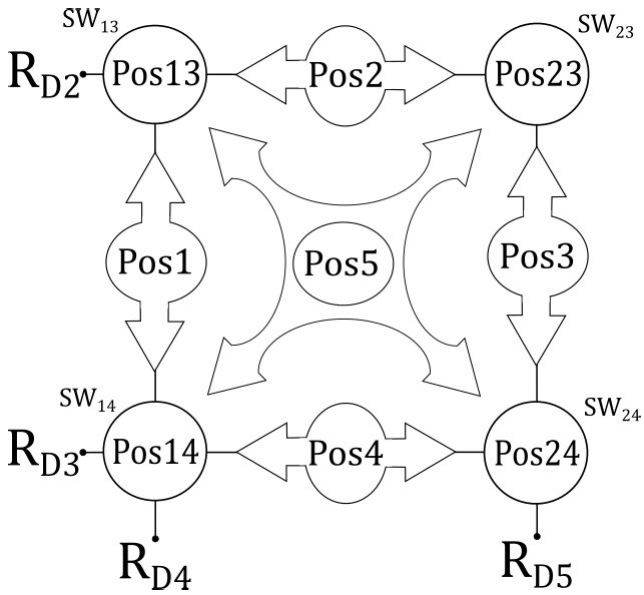

FIGURE 6. Sensor network's under a single wheel. The network can determine 9 different placements of the wheel. Four positions when the single sensor is activated and additional five position depends on the combination of the activated sensors.

As presented in Fig. 6, the sensor array underneath each wheel can be considered as an independent system. Each of the four sets of sensors can determine 9 different positions of each wheel, depending on which combination of sensors are activated. For instance, if only the sensor S13 is activated, the control unit determines that the wheel is positioned on Pos13, whereas in the event that the sensors S13 and S14 are activated, the unit will recognize that the wheel is placed in between the two sensors in Pos1. If all four sensors are activated, the wheel is considered to be in Pos5.

B. THE CONTROL UNIT

All feasible combinations of the four sensors under each wheel are presented in Fig. 7, which further explains the logic in Fig. 6. In the proposed system, logic "1" indicates that the sensor is activated, while "0" indicates otherwise. It is also possible to reverse the system logic such that logic "0" indicates that the sensor is active.

Upon activation of the sensors beneath each wheel, the control unit triggers the corresponding switch to connect the charger to the relevant coil. The proposed coil system consists of six rectangular coils as shown in Fig. 8. Rather than a single large coil, we adopted six smaller coils to cover the area of interest and at the same time optimize the energy

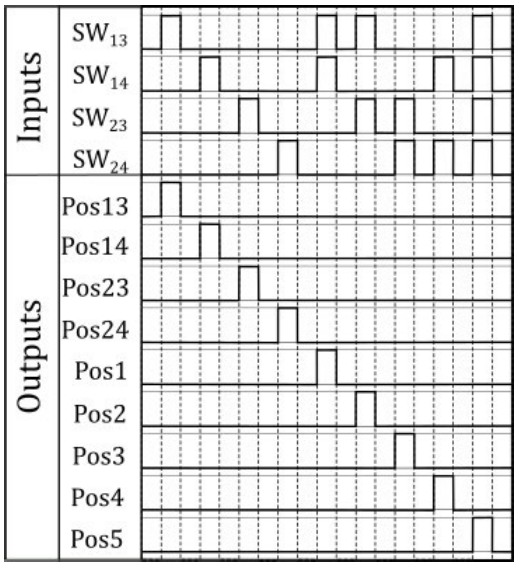

FIGURE 7. All possible combinations of a single wheel position. The positions Pos12, Pos14, Pos23, and Pos34 are sensed directly on the input of the micro-controller, while the positions Pos1 to Pos5 are determined depending on the combination of the switches S_{xy} activated simultaneously.

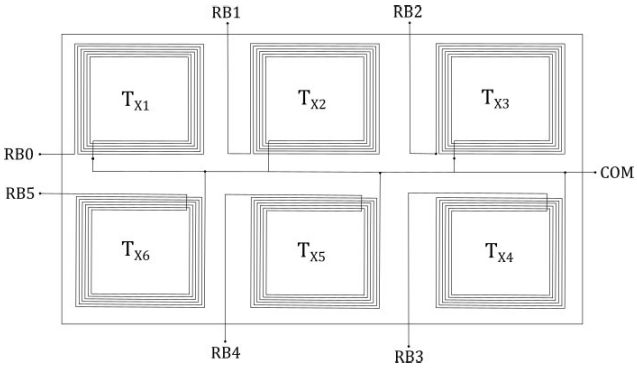

FIGURE 8. Connection of the transmitter coils in the charging pad.

consumed by the system. The open ends of each coil is linked to the connector COM, which is permanently connected to the inverter. In contrast, the opposite end of the coils are connected to independent switches. Therefore, connection RB0 is linked to switch SW0 on the switching board, RB1 to SW1 and so on. Once the related switch is triggered according to the calculations, the coil with highest efficiency is activated to transmit power to the EV.

V. SYSTEM DESIGN AND PRACTICAL IMPLEMENTATION

An implementation of the proposed system is presented in Fig. 9. The charging system comprises a power supply unit with a LM7805 voltage regulator that provides stable voltage to both the micro controller and WPT charger. In the control circuit, we used micro controller PIC18F452 to coordinate the operation of the charging pad. Four of the PICs pins; RD0 to RD3 are used as outputs. These outputs constantly change their values from logic "0" to logic "1", of which only one of the outputs can be on logic "1" at any time. These changes are constantly monitored by the micro controllers' inputs, RD4 to

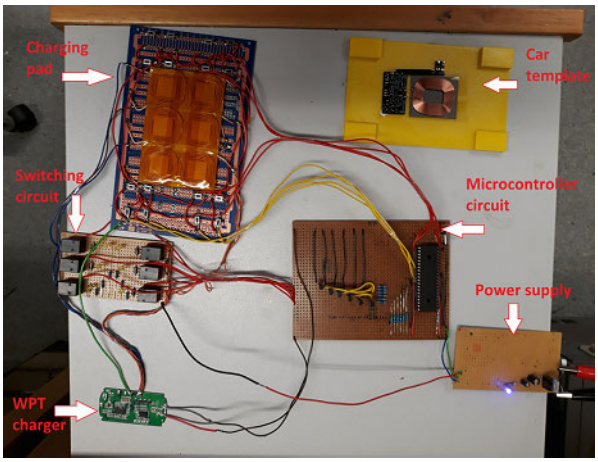

FIGURE 9. Practical implementation of the proposed system with a charging pad and a car.

RD7 respectively. Furthermore, we developed an algorithm such that the microelectronic converts the input signal by setting one or more outputs on gates RB0 to RB5 to logic "1" to control the switching board.

As the micro controller has internal resistance, to pull up logic "1", +5V is not enough to drive the relay directly from the micro controller. The typical current that is required through the coils to switch the relay is between 25mA and 70mA, therefore an external driving circuit is required. The NPN transistor BC547 was used to control the current through the relay coil. When logic "1" appears on the micro controller output pin, the transistor opens and is closed by logic "0" on the micro controller's output. To drive the transistor into saturation, the external pull up resistor R3 (4k7) is used. This provides the transistor with sufficient current to ensure a gain (h_{fe}) of 100. In addition, the diode D1 (1N2007) is used as a free wheel diode to protect the transistor against the electromagnetic field that is induced on the coil of the relay when the transistor turns off. The diode ensures that the energy induced on the coil dissipates on the internal resistance of the coil while LED D2 is used as an indicator when the relay is switched on.

As shown in Fig. 10, the designed system consists of a charging pad which includes a set of six charging coils. Each coil is connected to a separate relay, mounted on the switching board. The relays, controlled by a micro controller, connect the charging coil to the WPT charger. The power provided by the WPT charger is redirected through the relays to a specific coil. A car template is created to simulate the position of the car on the charging pad. In a single coil application, the Tx and Rx coils have to be bigger in order to maximize the transmission efficiency. With a multi-coil transmitter design, the coils can be smaller, since only the coil with maximum efficiency is used to charge the car. This benefit helps to reduce the cars weight.

When the car is placed on top of the charging pad, the wheels of the car trigger the sensors in the network. The micro controller determines the car's position and activates the appropriate coil, as shown in Fig. 11. Once the coil

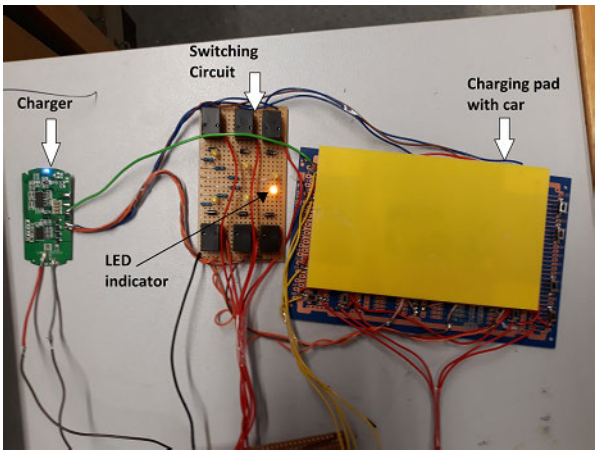

FIGURE 10. The charging system with the car parked on the parking space. The LED indicate which coil is active at a certain parking position.

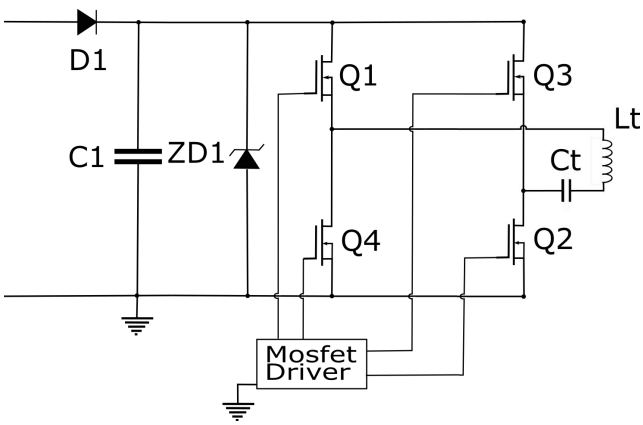

FIGURE 11. Circuit diagram of an H-bridge inverter.

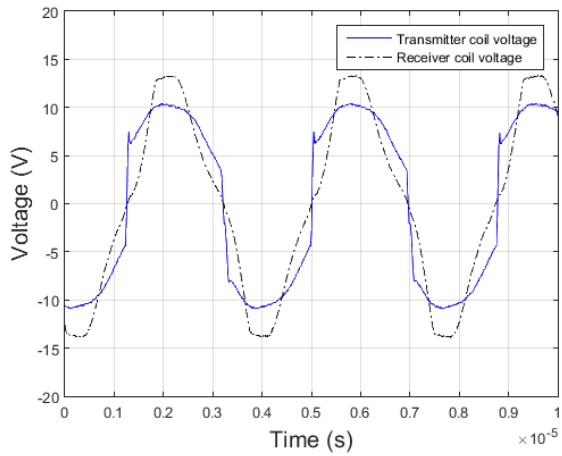

FIGURE 12. Comparison between the output voltage on the transmitter side and the voltage received by the receiver.

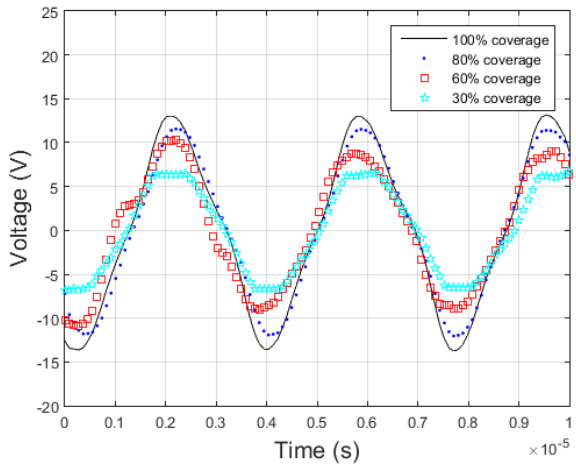

FIGURE 13. Voltage measured on the receiver after a change in misalignment between the coils.

is activated, the EV charging begins. An LED indicator on the switching circuit indicates which relay is activated. If the car position changes, the change is detected immediately by the sensor network, and the charging coil changes if necessary.

The WPT charger used in this experiment was based on a H-bridge inverter circuit to ensure that a full square wave voltage is applied to the transmitter coil. The switching frequency of the switches was set to 200kHz in order to operate within the QI standards. The circuit diagram of the charger can be seen in Fig. 11.

VI. RESULTS

To evaluate the proposed system, the experimental results are presented in this section. As mentioned, the H-bridge inverts the DC voltage provided by the power supply. The inverted square wave voltage is then applied to the transmitter coil. Following this the output of the inverter was measured and compared with the received voltage on the receiver coil on a time scale as presented in Fig. 12. In the figure, the output voltage of the inverter, presented in blue line is not square shape. This is due to inductance of the transmitter coil. The peak of the output voltage is just below 10V. This drop from the 12V supplied to the inverter represents a significant loss. Nevertheless, a drop in the semiconductor components is expected. Furthermore, the voltage on the receiver side is illustrated as dotted black line in the same figure. The received voltage is measured when the transmitter and receiver are fully aligned. At its peak, the received voltage reached 13.5V.

The transmitter and receiver loops were designed to have maximum of 50% misalignment between the closest coils. Therefore, the coverage between the transmitter and receiver can be between 100 % and 25%. In Fig. 13, the measured results of the voltage on the receiver coil for 100, 80, 60 and 30% coverage are presented and compared. The results show that transmission efficiency drops with increased misalignment between the coils. For instance when the coverage drops to 80%, the voltage measured on the receiver loop drops by 1.5V. The drop is even more evident when the coverage drops to 30%, the measured voltage on the receiver reduces to 7.6V.

According to the results, efficiency of the charging pad depends on the car's position. Fig. 14 compares the measured and calculated value of efficiency drop with respect to misplacement. The results shows that efficiency drops

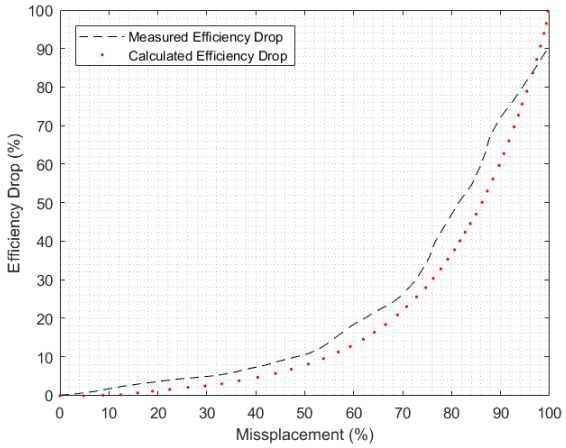

FIGURE 14. Efficiency drop caused by the misplacement between the transmitter and receiver coils.

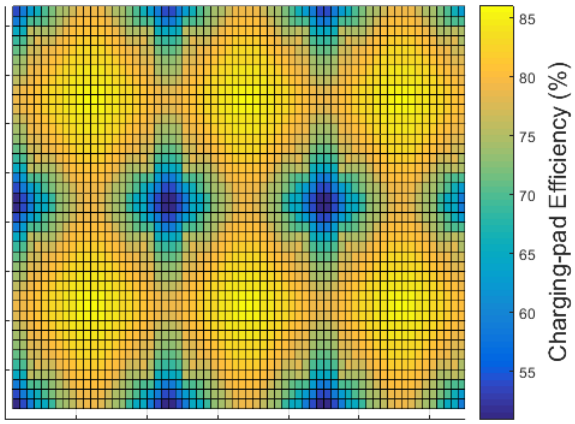

FIGURE 15. The efficiency of a charging pad for a whole working surface.

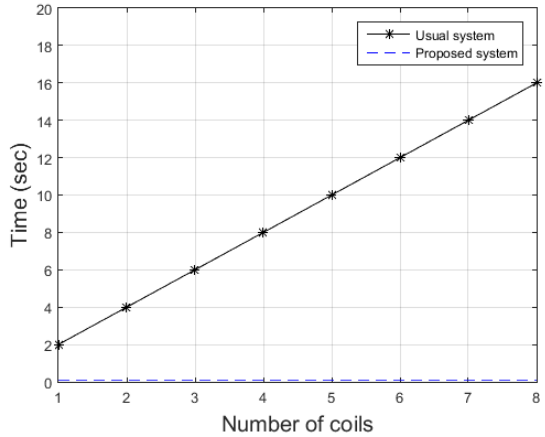

FIGURE 16. Comparison of the time needed for the charger to find the coil with maximum efficiency between proposed charger and conventional localization method.

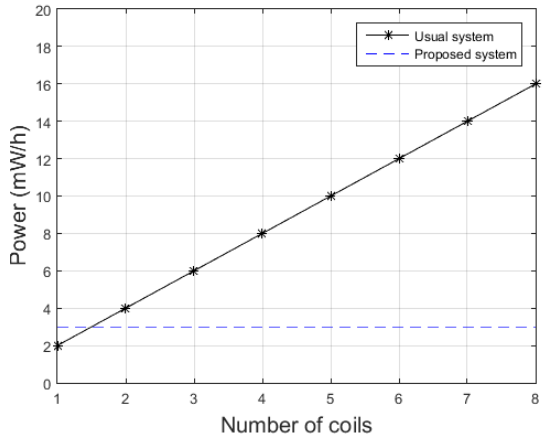

FIGURE 17. Comparison between the estimated power loss of proposed charger and the charger with the measuring method of finding the coil with maximum efficiency.

according to the level of the misplacement between currently transmitting coil and receiver coil. If the coils are perfectly aligned, the power transfer is maximized. When the misplacement between the two coils increase, the efficiency of the transmission also decreases. At minimum alignment of the coils at 25 %, the efficiency drop in the transmission is 40%. The efficiency can be increased by introducing more coils into the transmitter, which will increase the coverage.

Based on the efficiency drop caused by the misalignment between the transmitter and receiver, the corresponding efficiency of a charging pad is presented in Fig. 15. As shown in the figure, the charging pad achieves highest efficiency of 87% when the charging coil is aligned with the receiver coil. On the other hand, the charging efficiency drops when the center of the receiver coil is in between the four charging coils. In that case, the efficiency of the charging system drops to 52%.

One of the main advantages of the proposed smart charger is that it offers a reduced response time in comparison to existing multi-coil charger. The reaction time needed to respond to the introduction of the receiver coil or a change in position of the existing receiver coil is compared between the proposed and existing chargers. It was estimated that the chargers spends 2 seconds per coil in its bid to determine the coil with highest transfer efficiency. The time spent to estimate efficiency was measured for the existing phone charger systems. During that time, the charger send maximum power to the receiver, measure the efficiency and receive a response from the receiver. However, our proposed charging system can determine the EV's position and start the charging of the vehicle within 15ms, which is the time of single program cycle. The comparison in the reaction time of the charger compared to the conventional chargers is presented in Fig. 16. It is also important to note that in the proposed system, the power transmitter is decoupled from the sensor network of the charging system, though they are integrated. Therefore, the smart charger can constantly monitor the position of the vehicle without interrupting the charging.

Another important factor to consider in EV charging is the energy dissipated during the process of searching and selecting the optimal transmitting coil. It is also estimated that the power loss, from the charger with similar power to the proposed is 2mWh per coil. This estimation is based on the assumption that full power has to be transmitted from the transmitter to the receiver for at least 1s in order to measure

the efficiency of the transmission. Thus, the energy loss can be calculated as $P * (t_w/t)$, where P represents power of the charger, t_w represents the time to estimate or detect the position of the car and t represents the total time. Therefore, as shown in Fig. 17, for a system with 6 charging coils, the lost energy in each position is calculated to be around 12mWh. In contrast, our proposed charging solution does not require any power transmission before selecting the coil with maximum efficiency. In this regard, Fig. 17 also shows that power consumption of proposed system is higher for a single coil system however, with higher number of transmitting coils, the power consumption stays the same. In contrast, conventional systems power consumption increases proportionally with the number of coils.

VII. CONCLUSION

In this paper we investigated a smart charging system for EVs. The proposed system can autonomously determine the position of the receiver, which allows the charging pad to utilize only the coil with the highest transfer efficiency for charging the EV. This techniques optimizes the operations of the charging pad as the optimal coil can be determined almost immediately after the EV is located on the parking spot. Furthermore, the proposed design improves the efficiency of the charging system as the transmitter is not required to carry out measurements on each coil in order to determine the one with highest efficiency for each location. Thus, our solution eliminates the energy losses in the optimal coil selection process which can be significant in energy-intensive systems such as car charging. Finally, the proposed method of charging is more reliable since the car position is detected instantly and recalibration of the charger is not required if the car slips out of position.

ACKNOWLEDGMENT

This work was carried out within the Triangulum Project.

REFERENCES

[1] N. George and K. Kershaw, "Road use statistics Great Britain 2016," Dept. Transp., Stat. Release, London, U.K., Apr. 2016. [Online]. Available: https://www.licencebureau.co.uk/wp-content/uploads/road-use-statistics.pdf

[2] J. Grove and M. Dark, "Vehicle licensing statistics: Annual 2016," Dept. Transp., Stat. Release, London, U.K., Apr. 2017. [Online]. Available: https://assets.publishing.service.gov.uk/government/uploads/system/uploads/attachment_data/file/608374/vehicle-licensing-statistics-2016.pdf

[3] Y. A. Sha'aban, A. Ikpehai, B. Adebisi, and K. M. Rabie, "Bi-directional coordination of plug-in electric vehicles with economic model predictive control," *Energies*, vol. 10, no. 10, p. 1507, Sep. 2017,

[4] M. Contestabile, M. Alajaji, and B. Almubarak, "Will current electric vehicle policy lead to cost-effective electrification of passenger car transport?" *Energy Policy*, vol. 110, pp. 20–30, Nov. 2017.

[5] A. Marinescu *et al.*, "The way to engineering EV wireless charging: DACIA electron," in *Proc. Electr. Veh. Int. Conf. (EV)*, Bucharest, Romania, Oct. 2017, pp. 1–6. doi: 10.1109/EV.2017.8242094.

[6] A. Sultanbek, A. Khassenov, Y. Kanapyanov, M. Kenzhegaliyeva, and M. Bagheri, "Intelligent wireless charging station for electric vehicles," in *Proc. Int. Siberian Conf. Control Commun. (SIBCON)*, Astana, Kazakhstan, Jun. 2017, pp. 1–6. doi: 10.1109/SIBCON.2017.7998497.

[7] A. Kurs, A. Karalis, R. Moffatt, J. D. Joannopoulos, P. Fisher, and M. Soljacic,"Wireless power transfer via strongly coupled magnetic resonances," *science*, vol. 317, no. 5834, pp. 83–86, Jun. 2007

[8] J. Zhou, B. Luo, X. Zhang, and Y. Hu, "Extendible load-isolation wireless charging platform for multi-receiver applications," *IET Power Electron.*, vol. 10, no. 1, pp. 134–142, Jan. 2017. doi: 10.1049/iet-pel.2016.0432.

[9] M. Rozman *et al.*, "Combined conformal strongly-coupled magnetic resonance for efficient wireless power transfer," *Energies*, vol. 10, no. 4, p. 498, 2017,

[10] J. V. de Almeida and R. S. Feitoza, "Metamaterial-enhanced magnetic coupling: An inductive wireless power transmission system assisted by Metamaterial-based μ-negative lenses," *IEEE Microw. Mag.*, vol. 19, no. 4, pp. 95–100, Jun. 2018. doi: 10.1109/MMM.2018.2813858.

[11] Z. Li, C. Zhu, J. Jiang, K. Song, and G. Wei, "A 3-kW wireless power transfer system for sightseeing car supercapacitor charge," *IEEE Trans. Power Electron.*, vol. 32, no. 5, pp. 3301–3316, May 2017. doi: 10.1109/TPEL.2016.2584701.

[12] A. A. S. Mohamed, C. R. Lashway, and O. Mohammed, "Modeling and feasibility analysis of quasi-dynamic WPT system for EV applications," *IEEE Trans. Transp. Electrific.*, vol. 3, no. 2, pp. 343–353, Jun. 2017. doi: 10.1109/TTE.2017.2682111.

[13] D. Patil, M. K. McDonough, J. M. Miller, B. Fahimi, and P. T. Balsara, "Wireless power transfer for vehicular applications: Overview and challenges," *IEEE Trans. Transp. Electrific.*, vol. 4, no. 1, pp. 3–37, Mar. 2018. doi: 10.1109/TTE.2017.2780627.

[14] B. Regensburger, S. Sinha, A. Kumar, J. Vance, Z. Popovic, and K. K. Afridi, "Kilowatt-scale large air-gap multi-modular capacitive wireless power transfer system for electric vehicle charging," in *Proc. IEEE Appl. Power Electron. Conf. Expo.*, San Antonio, TX, USA, Mar. 2018, pp. 666–671. doi: 10.1109/APEC.2018.8341083.

[15] A. A. S. Mohamed, A. Berzoy, and O. A. Mohammed, "Experimental validation of comprehensive steady-state analytical model of bidirectional WPT system in EVs applications," *IEEE Trans. Veh. Technol.*, vol. 66, no. 7, pp. 5584–5594, Jul. 2017. doi: 10.1109/TVT.2016.2634159.

[16] M. Rozman *et al.*, "A new technique for reducing size of a wpt system using two-loop strongly-resonant inductors," *Energies*, vol. 10, no. 10, p. 1614, Oct. 2017.

[17] A. Barakat, K. Yoshitomi, and R. K. Pokharel, "Design approach for efficient wireless power transfer systems during lateral misalignment," *IEEE Trans. Microw. Theory Techn.*, vpl. 66, no. 9, pp. 4170–4177, Sep. 2018. doi: 10.1109/TMTT.2018.2852661.

[18] W. Zhang *et al.*, "High-efficiency wireless power transfer system for 3D, unstationary free-positioning and multi-object charging," *IET Electr. Power Appl.*, vol. 12, no. 5, pp. 658–665, Apr. 2018. doi: 10.1049/iet-epa.2017.0581.

[19] Wikipedia. (2018). *Parking Space*. Accessed: Jun. 20, 2018. [Online]. Available: https://en.wikipedia.org/wiki/Parking_space

[20] M. Budhia, J. T. Boys, G. A. Covic, and C.-Y. Huang, "Development of a single-sided flux magnetic coupler for electric vehicle IPT charging systems," *IEEE Tran. Ind. Electron.*, vol. 60, no. 1, pp. 318–328, Jan. 2013. doi: 10.1109/TIE.2011.2179274.

[21] S. Kim, G. A. Covic, and J. T. Boys, "Tripolar pad for inductive power transfer systems for EV charging," *IEEE Trans. Power Electron.*, vol. 32, no. 7, pp. 5045–5057, Jul. 2017. doi: 10.1109/TPEL.2016.2606893.

[22] S. Ruddell, U. K. Madawala, D. J. Thrimawithana, and M. Neuburger, "A novel wireless converter topology for dynamic EV charging," in *Proc. IEEE Transp. Electrific. Conf. Expo*, Dearborn, MI, USA, Jun. 2016, pp. 1–5. doi: 10.1109/ITEC.2016.7520264.

[23] S. Ganguly, D. Bhattacharjee, and M. Nasipuri, "Decremental depth bunch based 3D face recognition from range image," in *Proc. IEEE Region 10 Conf.*, Nov. 2015, pp. 1–4.

[24] I. A. Grechukhin *et al.*, "Russian lunar laser locator with millimeter accuracy," in *Proc. Int. Conf. Laser Opt. (LO)*, Jul. 2016, pp. R63.

[25] C. Xu, Y. Zhuang, H. Han, C. Song, Y. Huang, and J. Zhou, "Multi-coil high efficiency wireless power transfer system against misalignment," in *Proc. IEEE MTT-S Int. Wireless Symp. (IWS)*, Chengdu, China, May 2018, pp. 1–3. doi: 10.1109/IEEE-IWS.2018.8400877.

[26] P. Liang, Q. Wu, H.-D. Brüns, and C. Schuster, "Efficient modeling of multi-coil wireless power transfer systems using combination of full-wave simulation and equivalent circuit modeling," in *Proc. IEEE Int. Symp. Electromagn. Compat.*, Singapore, May 2018, pp. 466–471. doi: 10.1109/ISEMC.2018.8393822.

[27] P. Tan, C. Liu, L. Ye, and T. Peng, "Modeling and experimentation of multi-coil switching coupler for wireless power transfer systems," in *Proc. IEEE Energy Convers. Congr. Expo.*, Cincinnati, OH, USA, Oct. 2017, pp. 2579–2583. doi: 10.1109/ECCE.2017.8096489.

[28] C. Lilly. (2018). *Electric Car Market Statistics*. Accessed: Jun. 14, 2018. [Online]. Available: https://www.nextgreencar.com/electric-cars/statistics/

MATJAZ ROZMAN received the Diploma degree in electrical engineering from the University of Ljubljana, Slovenia, in 2010, and the M.Sc. degree in electronic engineering from the University of Manchester Metropolitan (MMU), in 2015, where he is currently pursuing the Ph.D. degree in wireless power transmission for electrical vehicle. He joined WeEn Semiconductors, Manchester, in 2017, as an Application Engineer. His current research interests include wireless power transfer, power line communications, wide band gap Silicon Carbide (SiC), triac, SCRs, and insulated-gate bipolar transistor (IGBT) applications.

AUGUSTINE IKPEHAI (GS'14–M'17) received the B.Sc. degree in physics from the University of Ibadan, Nigeria, the M.Sc. degree in mobile and personal radio communication engineering from Lancaster University, U.K., in 2005, and the Ph.D. degree in smart grid communication from the Manchester Metropolitan University, Manchester, U.K., in 2017. From 2001 to 2014, he worked in different roles, such as a Network Engineer with the IT-Engineering Department, Zenith Bank Plc, Nigeria. He has extensive industry experience in IP network design, implementation, and optimization, backed with professional certifications: CCNA, CCNP, CCIE(w), JNCIA, and JNCIS. From October 2017 to January 2019, he worked as a Postdoctoral Researcher with the School of Engineering, Manchester Metropolitan University. He is currently a Lecturer with the Department of Engineering and Mathematics, Sheffield Hallam University, Sheffield, U.K. His research interests include communications systems modeling, smart home, power line communication, and energy optimization in smart grid and other cyber-physical systems. He was a recipient of the MMU Knowledge Exchange Project Award and the Outstanding Knowledge Exchange Award, in 2016.

BAMIDELE ADEBISI (M'06–SM'15) received the B.S. degree in electrical engineering from Ahmadu Bello University, Zaria, Nigeria, in 1999, the M.S. degree in advanced mobile communication engineering, and the Ph.D. degree in communication systems from Lancaster University, Lancaster, U.K., in 2003 and 2009, respectively. He was a Senior Research Associate with the School of Computing and Communication, Lancaster University, from 2005 to 2012. He joined Manchester Metropolitan University, Manchester, U.K., in 2012, where he is currently a Professor in electrical and electronic engineering. He has been involving in several commercial and government projects focusing on various aspects of wireline and wireless communications. He is particularly interested in the research and development of communication technologies for electrical energy monitoring/management, transport, water, critical infrastructures protection, home automation, the IoTs, and cyber physical systems. He has several publications and a patent in the research area of data communications over power line networks and smart grid. He is a member of the IET.

KHALED M. RABIE received the M.Sc. (Hons.) and Ph.D. degrees from the University of Manchester, Manchester, U.K., in 2010 and 2015, respectively. He then worked as a Postdoctoral Research Associate with the Manchester Metropolitan University (MMU), Manchester, U.K., where he is currently an Assistant Professor. His research interests lie in the area of signal processing and analysis of wired and wireless communication networks. He is a Fellow of the U.K. Higher Education Academy. He secured first rank in both the B.Sc. and M.Sc. degrees and was nominated by the School of Electrical and Electronic Engineering for the Faculty's Distinguished Achievement Award (Postgraduate Research Student of the Year 2016) in recognition of his exceptional research output during his Ph.D. degree. He was also a recipient of the Best Student Paper Award at the IEEE ISPLC, TX, USA, 2015, and the MMU Outstanding Knowledge Exchange Project Award of 2016. He has served as the TPC Chair of the IEEE ISPLC'19, the Program Chair of the IEEE ISPLC'18, the IEEE CSNDSP'18 Co-Chair of the Green Communications and Networks Track, and the Publicity Chair of INISCOM'18. He is also an Associate Editor of the IEEE Access, and an Editor of the *Physical Communication journal* (Elsevier).

HARIS GACANIN (SM'12) received the Dipl.Ing. degree in electrical engineering from the University of Sarajevo, in 2000, and the M.Sc. and Ph.D. degrees from Tohoku University, Japan, in 2005 and 2008, respectively. From 2008 to 2010, he was with Tohoku University, first as the Japan Society for Promotion of Science Postdoctoral Fellow, and later, as an Assistant Professor. Since 2010, he has been with Alcatel-Lucent (now Nokia), where he currently leads the research department within Nokia Bell Labs. His professional interests are related to autonomous wireless systems and user experience automation. He has over 200 scientific publications (journals, conferences, and patent applications) and invited/tutorial talks. He acted as the chair, review, and technical program committee member of various technical journals and conferences. He is a recipient of the IEICE Communication System Study Group (2015) Award, the 2013 Alcatel-Lucent Award of Excellence, the 2012 KDDI Foundation Research Award, the 2009 KDDI Foundation Research Grant Award, the 2008 Japan Society for Promotion of Science (JSPS) Postdoctoral Fellowships for Foreign Researchers, the 2005 Active Research Award in Radio Communications, the 2005 Vehicular Technology Conference (VTC 2005-Fall) Student Paper Award from the IEEE VTS Japan Chapter, and the 2004 Institute of IEICE Society Young Researcher Award. He was awarded by the Japanese Government (MEXT) Research Scholarship, in 2002. He is an Associate Editor of the *IEEE Communications Magazine*, the *IEICE Transactions on Communications*, and previously the *IET Communications*.

HELEN JI received the B.Eng. degree in computer science and engineering from Xi'an Jiaotong University, China, the M.Sc. degree in computer science and software engineering from Xidian University, China, and the Ph.D. degree in formal methods in computer hardware verification from Stirling University, U.K., in 2000. She worked for Cadence Design Systems as a member of the technical staff, before she joined the Manchester Metropolitan University, U.K., first as a Lecturer, and then a Senior Lecturer. Her research interests include hardware acceleration, embedded systems design, the Internet of Things, and cyber-physical systems.

MICHAEL FERNANDO received the B.Eng. degree in electronics and communication engineering from Madurai Kamraj University, India, in 2003, and the M.Sc. degree in optoelectronic and communication systems and the Ph.D. degree in microwave imaging from Northumbria University, U.K., in 2005 and 2012, respectively. He is a Professor and currently the Dean of the Faculty of Architecture, Computing, and Engineering, University of Wales Trinity Saint David, Swansea. He is also a Chartered Engineer with the IET. He has published in many journals and conferences and delivered keynote speeches in various conferences and institutions. His current research interests include microwave holography, wireless power transfer, power line communication, medical imaging applications, concealed weapon detection, and late time response systems.